INFRASTRUCTURE ITALIA LAND 2 Srl
Via del Bosco Rinnovato, 6
20057 Assago (Milano)

Valutazione di Impatto Ambientale ai sensi del Titolo III del d.lgs. 152/2006
Pacchetto Elettrico MIL07

Data Center CAMPUS di Siziano
Siziano (PV)

Documento: 4553_ES_V_EP_05 - Pacchetto Elettrico MIL07
17/11/2025

Il Tecnico
DBA

Ingegnere
SACHA BUSETTI
ORDINE DEGLI
INGEGNERI DI
PAVIA

0 2 4 6 8 10m

LEGEND/LEGENDA

MV Containments
Distribuzione Media Tensione

MV Cable Containments
Distribuzione canale MV

Cavidotti Media Tensione diametro 200mm
MV Cable Conduit diameter 200mm

Pozzetto in cemento dim. 2,00m x 2,00m
Concrete manhole dim. 2,00m x 2,00m

Cable trays tag:
Cable tray type: Ladder, Solid bottom, Mesh etc
Service type: MV, LV, Fire, CTRL etc
System: MV, PV, chiller, 1A, 1B etc
Size: dimension WxH [mm]
B.Elev: bottom elevation of the tray in meter

Cable Ladder
Service Type: MV
System: MV
Size: 400x 100[mm]
B.Elev: 3.05[m]

Il presente elaborato è valido solo in coordinamento con tutte le altre discipline specialistiche con le quali deve essere verificata la conformità. Tutte le misure ed eventuali variazioni rispetto al presente elaborato devono essere verificate in cantiere.
This plan only valid in connection & coordination with the plans of all other Specialist disciplines, and must be checked for conformity with these plans. Deviations in dimensions must be clarified with the site management.

CLIENT / COMMITTENTE:

STACK INFRASTRUCTURE

Project Name / Progetto:
STACK MIL07 Datacenter

Location / Indirizzo progetto:
Via Lombardia, 27010 Siziano PV

BIM Client Consultant / Consulente BIM del Cliente
ARC:BIM
2nd Floor, 140 St John Street - London, GB

DESIGN TEAM / TEAM DI PROGETTO

CONSULTING DESIGNER / PROGETTISTA

ARCHITECTURAL DESIGN /
PROGETTO ARCHITETTONICO
Arch. Daniele De Bettin
DBA S.p.A.
Viale Liguria 24, Milano (MI)

STRUCTURAL DESIGN /
PROGETTO STRUTTURE
Ing. Diego Serafini
DBA S.p.A.
Viale G. G. Felissent 20D, Vittorio (TV)

MECHANICAL DESIGN /
PROGETTO IMP. MECCANICI ED ELETTRICI
Ing. Sacha Busetti
DBA S.p.A.
Via Natale Battaglia 10, Milano (MI)

ELECTRICAL DESIGN /
PROGETTO IMP. ELETTRICI E SPECIALI
Ing. Sacha Busetti
DBA S.p.A.
Via Natale Battaglia 10, Milano (MI)

COORDINATION / COORDINAMENTO
PM - *Alessandro Maiavero*
BIM Manager - *S. Di Biase*
BIM Coordinator - *R. Sodano*

INTEGRATED DESIGN / PROGETTAZIONE COORDINATA:

DBA S.p.A.
Sede legale:
Piazza Marconi, 15
32044 S. Stefano di Cadore (BL)
C.F. e P.IVA 01074030255
certificata ISO 9001:2015 SOAs n.35230/10/S Cofano L17-108/10
Sede secondaria:
Viale Felissent, 20/D
31020 Vittorio(TV)
Tel. +39 0438 1890500
www.dba.it - info@dba.it

PROJECT CODE	ORIGINATOR	FUNCTIONAL	SPICIAL E.	FORM	DISCIPLINE	TYPE	NUMBER
MIL07	DBA	A1	00	DR	E	59	101

NOTES / NOTE:

DBA PROJECT CODE	PROJECT STAGE	STATUS / STATO	REVISION / REVISIONE	DATE / DATA
13038001	WS3	S4	P01	07/11/25

REV.	REVISION DESCRIPTION - DESCRIZIONE REVISIONE	REVISION DATE
P01	1st - Rilascio S.Autorizzativo	07/11/25

Client / Committente: STACK INFRASTRUCTURE

Oggetto:
Elettrico
Distribuzione - Media Tensione
Piano Terra Blocco 1

Subject:
Electrical
MV Containments
Grantry roof Block 1

SIZE / FORMATO: A0 +1 [841*1189]
SCALE / SCALA: 1:100
DRAWN / REDATTO: D. Toffali
CHECKED / CONTROLLATO: S. Soncini
APPROVED / APPROVATO: S. Busetti

FILE NAME / NOME FILE: MIL07-DBA-A1-00-DR-E-59101.P01

DATE/DIBUJO/DATA/DATUM: 2025/11/07

PROPERTY OF DBA S.p.A. NON UTILIZZABILE O REPLICABILE (ANCHE IN PARTE) SENZA CONSENSO SCRITTO DA PARTE DI DBA.

STACK INFRASTRUCTURES

Via Lombardia 1, Siziano, Milan, Italy

MIL07

Earthing calculation

MIL07-DBA-XX-XX-CA-E-69001

07/11/2025

Status - S4/P01

Project Number 13038001

Nome File: MIL07-DBA-XX-XX-CA-E-69001 - Calculation - Earthing & Bonding

PROPERTY OF DBA S.p.A. NOT USABLE OR REPRODUCIBLE (EVEN IN PART) WITHOUT WRITTEN CONSENT FROM DBA S.p.A.

Branch Office
DBA
Via Natale Battaglia, 10
20127, Milano
Italiy
+39 02 5829821
dbaprogetti@pec.dbagroup.it
www.dbagroup.it

Head Office
DBA S.p.A.
Piazza Roma, 19
32045, Santo Stefano di Cadore (BL)
Italiy
+39 0422 693511
dbaprogetti@pec.dbagroup.it
www.dbagroup.it

Project:	MIL 07
Site Adress:	Via Lombardia 1, Siziano, Milan, Italy
Document Title:	Earthing calculation
Document Code:	MIL07-DBA-XX-XX-CA-E-69001
File Name:	MIL07-DBA-XX-XX-RP-E-60XXX - Earthing calculation.docx
Revsion Date:	07/11/2025
Revision descritption:	P01
Purpose of Issue:	13038001
Author:	Sacha Busetti
Edited by:	Fabio De Rosa
Checked by:	Stefano Soncini
Approved by:	Sacha Busetti

Revision History:

REV.	RED.	CONTR.	APP.	DATA	DESCRIZIONE
P01	FDR	SSO	SBU	07/11/2025	S4 – RIBA 3 Submittal

DBA. S.p.A. All rights and related copyright are reserved and owned by DBA. S.p.A. This document is the property of DBA. S.p.A. and may not be duplicated or published without written permission in whole or in part or be used for other purposes other than those indicate

INDEX

1. Earthing and bonding 4
1.1. Design assumptions 4
1.2. Touch voltages 6
1.3. Campus earthing system – Bare copper conductor thermal sizing 7
1.4. Earthing cable 8

PROPERTY OF DBA S.p.A. NOT USABLE OR REPRODUCIBLE (EVEN IN PART) WITHOUT WRITTEN CONSENT FROM DBA S.p.A.

1. Earthing and bonding

1.1. Design assumptions

A complete integrated earthing, bonding, surge and lightning protection system shall be installed as described in the specification and in the drawings.

The system shall comply with IEC 62305, IEC 60364 and other applicable standards.

The General Contractor must be responsible for proper installation of all the earthing and bonding system in the buildings in compliance with the above-mentioned standards.

In the overall campus there are different electrical systems:

- The MV 11 kV system that has a maximum three phase short circuit current of 19,5 kA calculated from the HV/MV transformer, at the end of the line is 10 kA. The phase-to-ground short circuit current is 20 A with a clearance time of 10 s due to the presence of an earthing impedance connected to the neutral point of the LV side of the HV/MV transformer
- The LV 400 V critical system of the DC that has a maximum of 43 kA of short circuit current calculated from the MV/LV transformer
- The LV 400 V system of the housing power module that has a maximum of 18 kA of short circuit current calculated from the MV/LV transformer and considering the contribution of the PV system

The campus earth grid is buried all over the campus surface and composed by different earthing systems such as:

- Earth ring of the MV rooms
- Earth ring of the data center building that is interconnected to the concrete reinforcement
- Earth ring of the office building
- Perimetral earth ring of the campus

The connection of all these earthing systems forms the campus grounding grid.

The design of the campus earthing system the CEI 50522 and the CEI 64-8 I^2t calculation method and the software Ampere 2025 are used.

PROPERTY OF DBA S.p.A. NOT USABLE OR REPRODUCIBLE (EVEN IN PART) WITHOUT WRITTEN CONSENT FROM DBA S.p.A.

In compliance with the geological report named "Geological Report_2025-Siziano_PV-L22_spa_REV0_Relazione_Geologica_MIL07", the soil is composed as following:

- From 0 to 1,5-2,0 meters of heterogeneous fill materials
- From 1,5-2,0 to 2,5-6 meters of silty sands
- Etc.

According to the geological report, a groundwater table is present at a minimum depth of approximately 2,5 m in some areas. In the design, a laying depth of 1,5 m has been considered for the horizontal earth electrode, in order to approach as much as possible a condition where the soil remains moist during the normal operation of the installation.

The horizontal electrode will be supplemented by vertical electrodes each 3 m long and 20 mm in diameter to reach the most underground conductive layers. In compliance with the Italian standard CEI 64-12, a soil characterized as clayey sand has a resistivity ranging from 50 to 500 Ω m. For design purposes, an average value of 225 Ω m has been adopted for the superficial layer with 2 meters depth and 70 Ω m for the layer from 2 to 6 meters.

Layer	ρ [Ωm]	h [m]
1	225,00	2,5
2	70,00	6

Under these conditions, the resistance of the campus earthing system is calculated equal to 0,2977 Ω, this value is hypothetical and strongly influenced to the real soil resistivity, which will be assessed later through a Wenner test.

PROPERTY OF DBA S.p.A. NOT USABLE OR REPRODUCIBLE (EVEN IN PART) WITHOUT WRITTEN CONSENT FROM DBA S.p.A.

1.2. Touch voltages

The estimation of the touch voltages was carried out in accordance with CEI EN 50522, which defines the maximum permissible voltage as a function of the fault clearing time.

In our case, in compliance with the table B.1 of the CEI EN 50522 and assuming a fault clearing time of 10 s and not considering gloves and shoes, a maximum allowable voltage of 85 V is obtained.

Fault duration t_f s	**Permissible touch voltage U_{Tp}** V
0,05	725
0,10	655
0,20	525
0,50	225
1,00	115
2,00	95
5,00	85
10,00	85

Figure 1 – Permissible touch voltage CEI EN 50522

The total ground potential rise is calculated as the product of the phase-to-earth fault current (20 A) and the total earth resistance (0,2977 Ω); this value is equal to 5,95 V. Therefore, we obtain that 5,95 V is lower than the 85 V value taken from the CEI EN 50522 standard; consequently, the touch voltage is verified.

PROPERTY OF DBA S.p.A. NOT USABLE OR REPRODUCIBLE (EVEN IN PART) WITHOUT WRITTEN CONSENT FROM DBA S.p.A.

1.3. Campus earthing system – Bare copper conductor thermal sizing

The campus earthing system consists of a 63 mm^2 bare copper conductor buried at a depth of 1,5 m. The thermal design is carried out using the three-phase short circuit current (I_k) at the end of the line of the 11 kV system (10 kA).

For safety purposes the following considerations are assumed:

- The phase to ground short circuit current is equal to the three-phase short circuit current ($I_g = I_k$)
- The split factor contribution of the MV shields cables is omitted
- The short circuit current does not split over several paths from the fault point to the star point of the HV/MV transformer

The thermal design of the underground earthing system is carried out using the I²t calculation method described in the IEC 50522, we have:

$$S = \frac{I_g}{K}\sqrt{\frac{t_{fc}}{ln\,\frac{\vartheta_f + \beta}{\vartheta_i + \beta}}}\,[\mathrm{mm}^2]$$

Where:

- I_g is the maximum phase to ground fault current (A);
- t_{fc} is the fault clearing time (s);
- K is a constant that assumes different values depending by the type of the conductor, in the design is used copper bare conductor so the k can have those values:
  - Copper: 226;
  - Alluminium: 148;
  - Steel: 78.
- ϑ_f is the final temperature of the conductor (°C);
- ϑ_i is the initial temperature of the conductor (°C);
- β is a coefficient that assumes different values depending by the type of the conductor:
  - Copper: 234,5;
  - Alluminium: 228;
  - Steel: 202.

From this equation and considering the t_{fc} = 1 s (condition that shall be verified with the HV/MV substation settings of the MV switchboard), an initial temperature of 20 °C and a final temperature of 400°C, the calculated minimum cross section is 45 mm^2, the nearest commercial cross section is 63 mm^2, that takes into account the deterioration of the copper bare conductor due to chemical corrosion of the soil, so the 50 mm^2 is not considered.

The earth ropes from the underground grid to the earth bars shall be 63 mm^2.

The earthing grid of the campus will be equipped with manholes and has a layout as per design drawing “MIL07-DBA-EX-UG-DR-E-69001”.

PROPERTY OF DBA S.p.A. NOT USABLE OR REPRODUCIBLE (EVEN IN PART) WITHOUT WRITTEN CONSENT FROM DBA S.p.A.

1.4. Earthing cable

In this paragraph the sizing of the earth cables of the main feeder and component is reported. The thermal design is carried out using the I²t calculation method described in the CEI 64-8 par. 543.1:

$$S = \frac{I_g \sqrt{t_{fc}^2}}{K} \ [\mathrm{mm}^2]$$

Where:

- I_g is the maximum phase-to-ground fault current (A)
- t_{fc} is the fault clearing time (s)
- K is a constant that assumes different values depending by the type of the conductor and the insulation, in the design is used copper so the k can have those values:
  - PVC insulated: 115
  - HEPR insulated: 143
  - Bare: 228

In the following table the minimum cross section area of the earthing cables is reported.

Equipment	I_g (A)	t_{fc} Clearing fault time (s)	Insulating material (-)	K Insulating material coefficient (-)	S Conductor cross section (mm²)	Commercial size (mm²)	Number of cables (-)	Total cross section area (mm²)
PCM-X, RCM-X, LLM-X	10000	1	HEPR	143	70	95	1	95
PTX-X neutral point	43000	0,5	HEPR	143	213,00	240	1	240
PTX-X metallic part	43000	0,5	HEPR	143	213,00	240	1	240
Diesel generator	43000	0,5	HEPR	143	213,00	240	1	240
PLI-X, RLI-X	43000	0,4	HEPR	143	191,00	240	1	240
LLI-1H	20000	0,4	HEPR	143	89,00	95	1	95
LBB-X	43000	0,2	HEPR	143	135,00	150	1	150
LSS-1H	16000	0,4	HEPR	143	71,00	95	1	95
MDB-1H-2	12000	0,4	HEPR	143	54,00	70	1	70
MSS-X	36000	0,3	HEPR	143	138,00	150	1	150
MDB-X	25000	0,2	HEPR	143	39,50	50	1	50
GDB-POD-X	20000	0,4	HEPR	143	89,00	95	1	95
STS-SWB-1, STS-X-1, STS-X-2	43000	0,4	HEPR	143	191,00	240	1	240
PCU-X-1, PCU-X-2, PCU-X-3	43000	0,4	HEPR	143	191,00	240	1	240
Ropes conductor to bar of MV rooms	10000	1	Bare	228	22,00	35	2	70
Ropes conductor to bar of MV POD	10000	1	Bare	228	22,00	35	2	70
Ropes conductor to bar of LV POD	43000	0,4	Bare	228	60,00	70	2	140
Ropes conductor to bar of battery POD	16000	0,4	Bare	228	22,50	35	2	70

For details concerning the cross-section areas of the earth cables of the main equipment inside the POD and the data center building, please refers to the previous table and the drawing “MIL07-DBA-XX-XX-DW-E-69701”.

PROPERTY OF DBA S.p.A. NOT USABLE OR REPRODUCIBLE (EVEN IN PART) WITHOUT WRITTEN CONSENT FROM DBA S.p.A.

STACK INFRASTRUCTURES

Via Lombardia 1, Siziano, Milan, Italy

MIL07

Systems Description and SoO

MIL07-DBA-XX-XX-RP-E-60001

07/11/2025

Status - S4 (Suitable fo Stage Approval)

Project Number 13038001

Nome File: MIL07-DBA-XX-XX-RP-E-60001 - Systems Description and SoO.docx

PROPERTY OF DBA S.p.A. NOT USABLE OR REPRODUCIBLE (EVEN IN PART) WITHOUT WRITTEN CONSENT FROM DBA S.p.A.

Branch Office
DBA
Via Natale Battaglia, 10
20127, Milano
Italiy
+39 02 5829821
dbaprogetti@pec.dbagroup.it
www.dbagroup.it

Head Office
DBA S.p.A.
Santo Stefano di Cadore
32045, Santo Stefano di Cadore (BL)
Italiy
+39 0422 693511
dbaprogetti@pec.dbagroup.it
www.dbagroup.it

Project:	MIL 07
Site Adress:	Via Lombardia 1, Siziano, Milan, Italy
Document Title:	Systems Description and SoO
Document Code:	MIL07-DBA-XX-XX-RP-E-60001
File Name:	MIL07-DBA-XX-XX-RP-E-60001 - Systems Description and SoO.docx
Revsion Date:	07/11/2025
Revision descritption:	S4 – Riba 3 Submittal
Purpose of Issue:	13038001
Author:	Sacha Busetti
Edited by:	Davide Toffali
Checked by:	Alessandro Masiero
Approved by:	Sacha Busetti

Revision History:

REV.	RED.	CONTR.	APP.	DATA	DESCRIZIONE

PROPERTY OF DBA S.p.A. NOT USABLE OR REPRODUCIBLE (EVEN IN PART) WITHOUT WRITTEN CONSENT FROM DBA S.p.A.

P01	DTO	ALM	SBU	07/11/2025	S4 – Riia 3 Submittal

DBA. S.p.A. All rights and related copyright are reserved and owned by DBA. S.p.A. This document is the property of DBA. S.p.A. and may not be duplicated or published without written permission in whole or in part or be used for other purposes other than those indicate

PROPERTY OF DBA S.p.A. NOT USABLE OR REPRODUCIBLE (EVEN IN PART) WITHOUT WRITTEN CONSENT FROM DBA S.p.A.

INDEX

1. Tables and Figures 5
1.1. Tables Index 5
1.2. Figures Index 5
2. Reference and Design Assumption 6
2.1. STACK Reference and Standards 6
2.2. MIL07 - Electrical Deliverables 6
2.2.1. REPORTS 6
2.2.2. SPECIFICATIONS 6
2.2.3. SCHEDULES 6
2.2.4. CALCULATIONS 6
2.2.5. SCHEMATICS 6
2.2.6. DRAWINGS 6
2.3. MIL07 Design Assumptions 7
3. System Overview 8
3.1. Medium Voltage power system 8
3.2. Low voltage system 8
3.2.1. Primary Critical system 8
3.2.2. Reserve Critical system 9
3.2.3. Landlord House system 10
4. MEDIUM VOLTAGE RING OPERATIONS 11
4.1. MV Switchboards Ring Main Units (RMUs) 11
4.2. MV Substation feeders restoration 12
4.3. Maintenance on MV Feeders 12
4.4. MV Key Interlocks 14
5. TRANSFORMER - GENERATOR CHANGEOVER 15
5.1. Automatic mode 17
5.1.1. From Transformer to Generator – AUTO mode 17

PROPERTY OF DBA S.p.A. NOT USABLE OR REPRODUCIBLE (EVEN IN PART) WITHOUT WRITTEN CONSENT FROM DBA S.p.A.

5.1.2. From Generator to Transformer – AUTO mode 17
5.2. Manual mode 18
5.2.1. From Transformer to Generator – MANUAL mode 18
5.2.2. From Generator to Transformer – MANUAL mode 19
5.3. Load Bank test for generator 19
5.4. Failure scenario 21
5.4.1. Source breakers fail to open 21
5.4.2. Source breakers fail to close 21
5.4.3. Generator failures 21
6. STS CHANGEOVER OPERATION 22
6.1. STS Operation mode 23
6.1.1. Primary Critical System UPS failure 23
6.1.2. Primary Critical System Busbar failure 24
6.1.3. Second Reserve Critical System future installation 25
7. FANWALL UNITS ATS CHANGEOVER OPERATION 26
7.1. FWU ATS Operation mode 26
8. KEY INTERLOCK SYSTEM 28
8.1. MV Earth switch Interlocks between MV Campus substation and RMUs 28
8.2. MV RMUs Interlocks 29
8.3. MV Transformer door interlock 30
8.4. UPS Maintenance bypass interlock 31
9. Emergency Power Off system (EPO) 33

PROPERTY OF DBA S.p.A. NOT USABLE OR REPRODUCIBLE (EVEN IN PART) WITHOUT WRITTEN CONSENT FROM DBA S.p.A.

1. Tables and Figures

1.1. Tables Index

Table 1. MV Substation restoration ANSI 2 time delay between transformer feeders. 12
Table 2. Voltage and Frequency deviation thresholds. 16
Table 3. Time Delay functions and setpoints. 16

1.2. Figures Index

Figure 1. MV Ring Main Units Overview. 11
Figure 2: MV Ring 1 maintenance on Substation feeders 13
Figure 3. MV Ring 2 maintenance on Substation feeders 14
Figure 4. Main LV Switchboard Feeders schematic. 15
Figure 5. Generator Load Bank temporary connection schematic. 20
Figure 6. STS configuration for 12MW IT Load, supplied by their dedicated line-up and reserve busbar. 22
Figure 7. Primary Critical System UPS failure. 23
Figure 8. Primary Critical System Busbars failure. 24
Figure 9. ATS FanWall units configuration for 2x6MW IT Data Halls, supplied by their dedicated line-up and reserve busbar. 26
Figure 10. MV Earth Switch Key Interlock. 29
Figure 11. MV RMUs Key Interlocks. 30
Figure 12. MV Transformer door interlock. 31

PROPERTY OF DBA S.p.A. NOT USABLE OR REPRODUCIBLE (EVEN IN PART) WITHOUT WRITTEN CONSENT FROM DBA S.p.A.

2. Reference and Design Assumption

2.1. STACK Reference and Standards

- STACK STEER V.2 ACC Option 2 package

2.2. MIL07 - Electrical Deliverables

2.2.1. REPORTS

- MIL07-DBA-XX-XX-RP-E-60001 - Systems Description and SoO
- MIL07-DBA-XX-XX-RP-E-60002 - Statement Of Requirements
- MIL07-DBA-XX-XX-RP-E-69001 - Risk Analysis Lighting Protection
- MIL07-DBA-XX-XX-RP-E-60003 - Short Circuit & Coordination Study (High level)

2.2.2. SPECIFICATIONS

- MIL07-DBA-XX-XX-SP-E-60001 - OFCI Specification - Power Module
- MIL07-DBA-XX-XX-SP-E-60002 - OFCI Specification – Generator

2.2.3. SCHEDULES

- MIL07-DBA-XX-XX-SH-E-60001 - Schedule - MV & LV Cables
- MIL07-DBA-XX-XX-SH-E-60002 - Schedule - Main Equipment

2.2.4. CALCULATIONS

- MIL07-DBA-XX-XX-CA-E-60001 - Calculation - Load Assessment
- MIL07-DBA-XX-XX-CA-E-60002 - Calculation - MV & LV Cables
- MIL07-DBA-XX-XX-CA-E-69001 - Calculation - Earthing & Bonding
- MIL07-DBA-XX-XX-CA-E-63001 - Calculation – Lighting

2.2.5. SCHEMATICS

- MIL07-DBA-XX-XX-DW-E-60701 - Overall Block Diagram
- MIL07-DBA-XX-XX-SD-E-59701 - Single Line Diagram - Medium Voltage Ring
- MIL07-DBA-XX-XX-SD-E-617xx - Single Line Diagram LV Systems
- MIL07-DBA-XX-XX-DW-E-63701 - Schematic - Lighting
- MIL07-DBA-XX-XX-DW-E-63702 - Schematic - Emergency Lighting
- MIL07-DBA-XX-XX-DW-E-69701 - Schematic - Earthing & Lightning
- MIL07-DBA-XX-XX-DW-E-61710 - Schematic - Photovoltaic System

2.2.6. DRAWINGS

- DR-E-59xxx MV Containment drawings
- DR-E-60xxx Electrical Main Equipment drawings
- DR-E-61xxx LV Containment drawings

PROPERTY OF DBA S.p.A. NOT USABLE OR REPRODUCIBLE (EVEN IN PART) WITHOUT WRITTEN CONSENT FROM DBA S.p.A.

- DR-E-62xxx Small Power drawings
- DR-E-63xxx Lighting and Emergency lighting drawings
- DR-E-64xxx Extra LV Containment drawings
- DR-E-69xxx Earthing and Lightning drawings

2.3. MIL07 Design Assumptions

The Data center electrical system is designed to be flexible according to the electrical topology N+1 by reserve redundant configuration for IT and essential mechanical loads. Critical and essential load feeding Data Center space shall be concurrently maintainable and allow for reliable operation. Two 6MW Data Halls are supplied by two independent MV rings serving the 12 MW of IT load plus the mechanical loads.

Space provision for a second reserve critical system is provided, in case of second DataHall will be located to a different tenant requiring N+1 independently.

One Landlord House system installed in day one will supply all the Data halls and the offices ancillary services.

The power supply of the MIL07 building will be provided from two shelters of the HV/MV existing substation built in the data center campus MIL01. The voltage level from the HV substation will be 11kV.

According several discussions and as agreed during design stage, the MV Ring feeder is splitted in two rings. See MIL07 Load Assessment for detail on feeders ampacity.

PROPERTY OF DBA S.p.A. NOT USABLE OR REPRODUCIBLE (EVEN IN PART) WITHOUT WRITTEN CONSENT FROM DBA S.p.A.

3. System Overview

3.1. Medium Voltage power system

Derived from a private substation located in MIL01 Stack campus at 11 kV voltage level.

Two MV feeders and two MV campus switchboards will be sized for the total 12MW IT building, to ensure 2N redundancy.

Down-stream two different rings will be installed:

- one medium voltage ring will feed a 6 MW IT load for a total of 5 MV Switchboards (3 critical + 1 reserve +1 housing)
- one medium voltage ring will feed a 6 MW IT load for a total of 4 MV Switchboards (3 critical + 1 reserve)

3.2. Low voltage system

Electrical distribution: Concurrent maintainability via Critical Power System backed up by a catcher. Any single component and element in the electrical system can be removed from service on a planned or unplanned basis without limiting the ability to operate the critical IT equipment.

Redundancy:

Critical Power System: N+1 (single contingency, concurrently maintainable)

Critical Mechanical Power System: N+1 (single contingency, concurrently maintainable)

IT load is backed up by the catcher through STS, that means with no break transition. Fan wall units are backed up by internal ATSC, that means open transition in case of primary feeder failure.

Please refer to the MV/LV block diagram and MV and LV single line diagrams for further details.

3.2.1. Primary Critical system

Each primary critical POD has a dedicated room and contains:

- a Medium Voltage Switchgears (SF6 free) and a MV/LV medium voltage/low voltage transformer 3500 kVA Vcc= 12%
- a main low voltage switchboard provided with ATSC, managing changeover between transformer and emergency generator feeders. The switchboard has two sections: an essential busbar backed up by a diesel generator and a critical one downstream the UPSes. Essential busbar feeds:
    - two chillers
    - the mechanical UPS switchboard

PROPERTY OF DBA S.p.A. NOT USABLE OR REPRODUCIBLE (EVEN IN PART) WITHOUT WRITTEN CONSENT FROM DBA S.p.A.

    - the IT UPSes input section
    - other non-critical loads
    - the no-break busbar, downstream the UPSes, supply the IT load. An interlocked breaker connects the UPS input and UPS output sections which functions as a UPS maintenance bypass breaker.
- two 1 MW static uninterruptible power supply (modular UPS) system with related batteries: 5 minutes EOL, Lithium battery type.
- a 330 kVA static uninterruptible power supply (modular UPS) system with related batteries: 10 minutes EOL. Lithium battery type.
- the mechanical UPS switchboard feeds critical mechanical loads, such as fan wall, chillers control section and pumps
- two 1600 A STS cabinets to cross the critical lineup with the catcher in case of failure or maintenance needed
- a 400A distribution busbar to supply as a primary feeder all the fan wall units (provided with internal ATS by vendor)

In addition, a containerized diesel generator 3750 kVA / 3000 kW will be installed close to the POD.

The generator and POD container will be part of OFCI furniture. Further details and specifications are included in the dedicated documents:

- MIL07-DBA-XX-XX-SP-E-60001 - OFCI Specification - Power Module
- MIL07-DBA-XX-XX-SP-E-60002 - OFCI Specification – Generator

3.2.2. Reserve Critical system

Each reserve critical POD has a dedicated room and contains:

- a Medium Voltage Switchgears (SF6 free) and a MV/LV medium voltage/low voltage transformer 3500 kVA Vcc= 12%
- a main low voltage switchboard provided with ATSC, managing changeover between transformer and emergency generator feeders. The switchboard has two sections: an essential busbar backed up by a diesel generator and a critical one downstream the UPSes. Essential busbar feeds:
    - two chillers
    - the mechanical UPS switchboard
    - the IT UPSes input section
    - other non-critical loads
    - the no-break busbar, downstream the UPSes, supply the IT load. An interlocked breaker connects the UPS input and UPS output sections which functions as a UPS maintenance bypass breaker.

PROPERTY OF DBA S.p.A. NOT USABLE OR REPRODUCIBLE (EVEN IN PART) WITHOUT WRITTEN CONSENT FROM DBA S.p.A.

- two 1 MW static uninterruptible power supply (modular UPS) system with related batteries: 5 minutes EOL, Lithium battery type.
- a 330 kVA static uninterruptible power supply (modular UPS) system with related batteries: 10 minutes EOL. Lithium battery type.
- the mechanical UPS switchboard feeds critical mechanical loads, such as fan wall, chillers control section and pumps.
- a 3200 A IT distribution busbar to supply as a secondary feeder all the STS located in the primary critical PODs
- a 400A distribution busbar to supply as a secondary feeder all the fan wall units (provided with internal ATS by vendor)

In addition, a containerized diesel generator 3750 kVA / 3000 kW will be installed close to the POD.

The generator and POD container will be part of OFCI furniture. Further details and specifications are included in the dedicated documents:

- MIL07-DBA-XX-XX-SP-E-60001 - OFCI Specification - Power Module
- MIL07-DBA-XX-XX-SP-E-60002 - OFCI Specification – Generator

3.2.3. Landlord House system

Landlord House line-up is dedicated to supplying all the campus and building auxiliary systems. This line-up will serve all the building. The subsystem POD has a dedicated room and contains:

- a Medium Voltage Switchgears (SF6 free) and a MV/LV medium voltage/low voltage transformer 1250 kVA Vcc= 12%
- a main low voltage switchboard provided with ATSC, managing changeover between transformer and emergency generator feeders. The switchboard has one essential busbar backed up by a diesel generator that feeds noncritical loads such as secondary distribution panel, EV charger, elevator, etc…
- a 300 kVA static uninterruptible power supply (modular UPS) system with related batteries: 10 minutes EOL. Litium battery type
- a critical switchboard backed up by the UPS, that feeds IDF and MMR critical loads, as well as the BMS and EPMS system. There is an interlocked breaker connecting the UPS input and UPS output sections which functions as a UPS maintenance bypass breaker.

In addition, a containerized diesel generator 1250 kVA / 1000 kW will be installed close to the POD.

The generator and POD container will be part of OFCI furniture. Further details and specifications are included in the dedicated documents:

- MIL07-DBA-XX-XX-SP-E-60001 - OFCI Specification - Power Module

PROPERTY OF DBA S.p.A. NOT USABLE OR REPRODUCIBLE (EVEN IN PART) WITHOUT WRITTEN CONSENT FROM DBA S.p.A.

- MIL07-DBA-XX-XX-SP-E-60002 - OFCI Specification – Generator

PROPERTY OF DBA S.p.A. NOT USABLE OR REPRODUCIBLE (EVEN IN PART) WITHOUT WRITTEN CONSENT FROM DBA S.p.A.

4. MEDIUM VOLTAGE RING OPERATIONS

4.1. MV Switchboards Ring Main Units (RMUs)

Two MV switchboards feeders in the campus will feed two different rings. Each loop in and loop out switch within the MV Switchboards Ring Main Units (RMUs) is equipped with a loop specific interlock mechanism. All the interlocks on a given loop are the same with interchangeable keys. The keys on one loop will not exchange with any other loops. Refer to Figure 1 for the MV rings indicating loop in and loop out switches with Open-Close positions of switches.

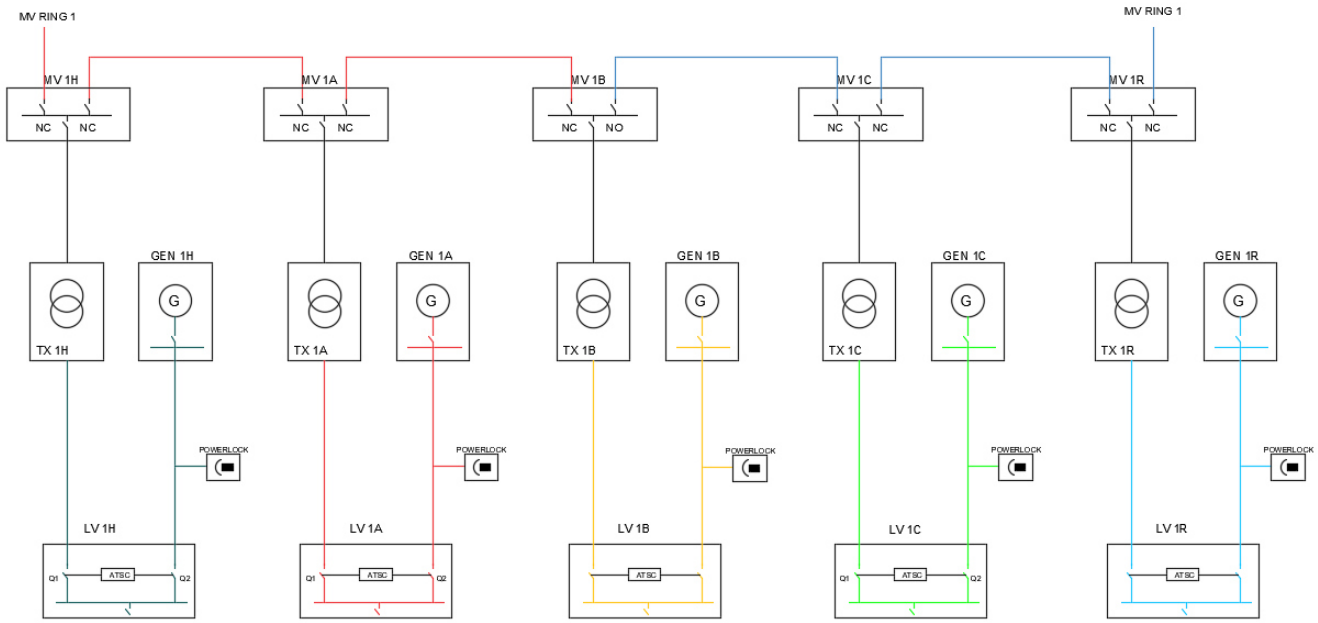

PROPERTY OF DBA S.p.A. NOT USABLE OR REPRODUCIBLE (EVEN IN PART) WITHOUT WRITTEN CONSENT FROM DBA S.p.A.

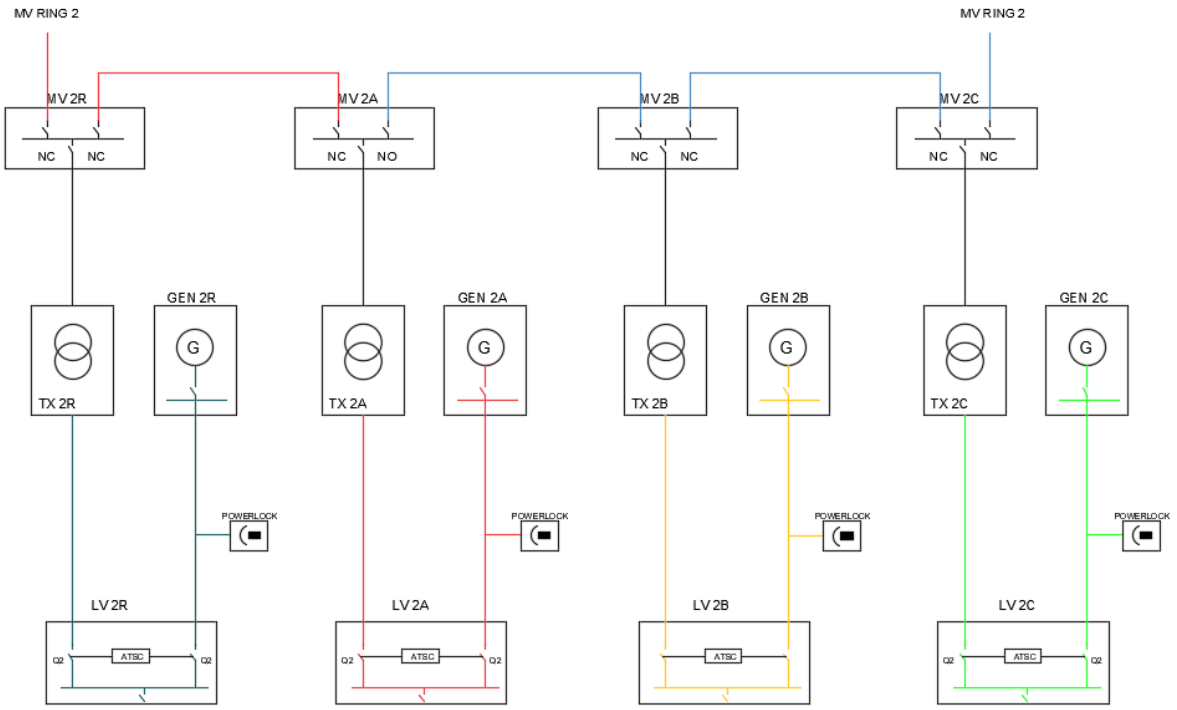

Figure 1. MV Ring Main Units Overview.

During normal operation, both the feeders from the grid are live.

In the MV-1B and MV-2A one switch will be open during the normal operation, thereby dividing the system load on to two grid power intakes. So,

- Ring 1 Feeder RED feeds RMU's: MV 1H, MV 1A and MV 1B
- Ring 1 Feeder BLUE feeds RMU's: MV 1R and MV 1C
- Ring 2 Feeder RED feeds RMU's: MV 2R and MV 2A
- Ring 2 Feeder BLUE feeds RMU's: MV 2C and MV 2B

In case of MV substation supply is not available, emergency operation takes place and the main power source for LV systems will be the LV generators connected to the main LV switchboards. For detailed operations on LV switchboards please refer to Chapter 5.

4.2. MV Substation feeders restoration

When the grid power fails, the generators will start up and will take over the load. There are two options to trip the MV breaker:

- LV ATSC can provide a dry contact that will trip the Transformer MV breaker by 'open-command' once detect transformer feeder failure
- RMU can have its internal status contacts of the Voltage Sensing units on the transformer feed. When Voltage is lost, the transformer breaker is tripped

PROPERTY OF DBA S.p.A. NOT USABLE OR REPRODUCIBLE (EVEN IN PART) WITHOUT WRITTEN CONSENT FROM DBA S.p.A.

Once MV feeders return healthy, switching ON all transformer in a Ring simultaneously results in a high inrush current through the upstream MV breaker and transformer. This high inrush may trip the respective MV breaker, damage CT's or cause a transient in the upstream MV Substation.

To avoid this scenario, the return to Substation source shall be staggered with specific time delay between the transformer switching. The transformer protection Q3 relay will 'know' that the source is healthy by dry contacts coming from the Voltage sensing devices integrated in the switchboard. By adding an ANSI 2 relay function at the Q3 breaker within all MV boards, a programmable time delay between the transformer receiving a 'close-command' should be preset.

RING	2R (SEC)	2A (SEC)	2B (SEC)	2C (SEC)
2	0	2	4	6

Table 1 provides an example for the overall switching delay over a ring which shall be confirmed with the local Substation operator.

RING	1H (sec)	1A (sec)	1B (sec)	1C (sec)	1R (sec)
1	0	2	4	6	8

RING	2R (sec)	2A (sec)	2B (sec)	2C (sec)
2	0	2	4	6

Table 1. MV Substation restoration ANSI 2 time delay between transformer feeders.

4.3. Maintenance on MV Feeders

In the event of one of the two feeders of the ring not being available (e.g. maintenance), the opening RMU point has to be moved to either MV 1H or MV 1R to ensure power continuity of Ring1; to either MV 2R or MV 2C to ensure power continuity of Ring2. This change over is to be carried out manually. Figure 2 and Figure 3 show the maintenance scenarios on Ring1 and Ring2 respectively.

The EPMS system should have the possibility to monitor the locked or unlocked status of the interlocks and open-close breaker's status.

PROPERTY OF DBA S.p.A. NOT USABLE OR REPRODUCIBLE (EVEN IN PART) WITHOUT WRITTEN CONSENT FROM DBA S.p.A.

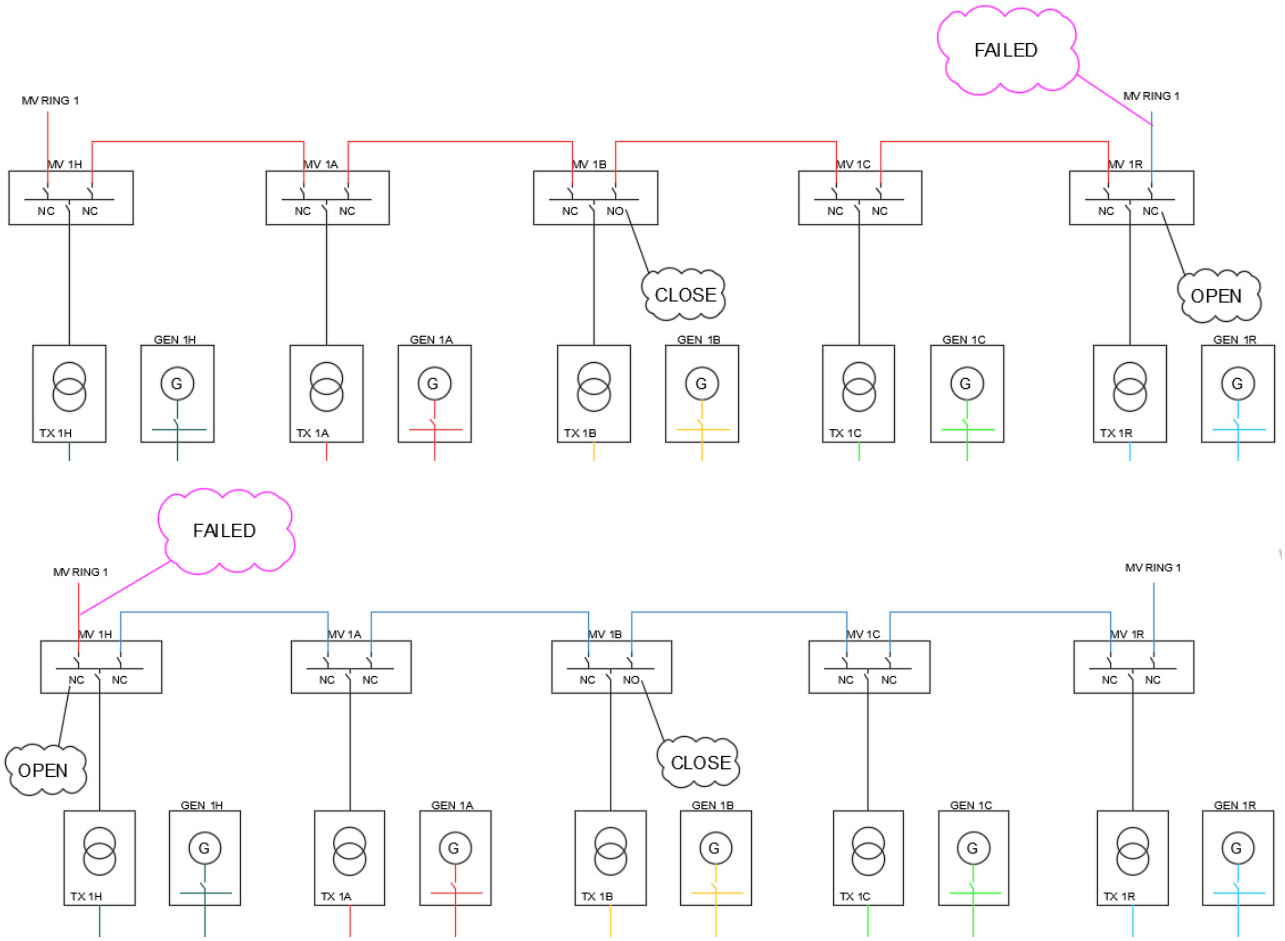

Figure 2: MV Ring 1 maintenance on Substation feeders

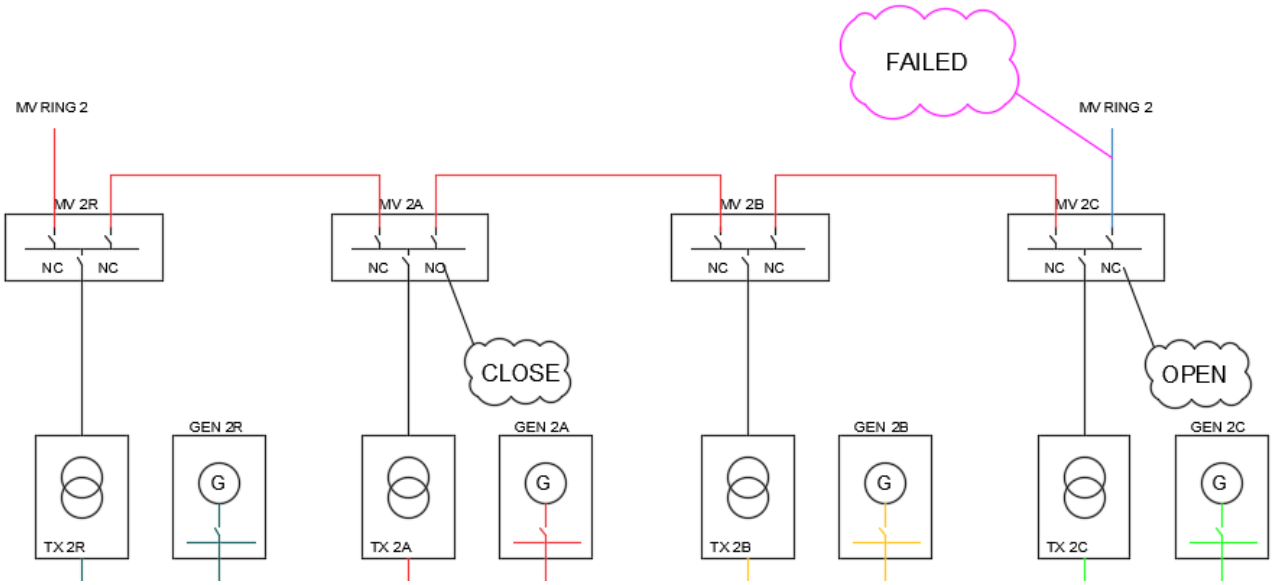

PROPERTY OF DBA S.p.A. NOT USABLE OR REPRODUCIBLE (EVEN IN PART) WITHOUT WRITTEN CONSENT FROM DBA S.p.A.

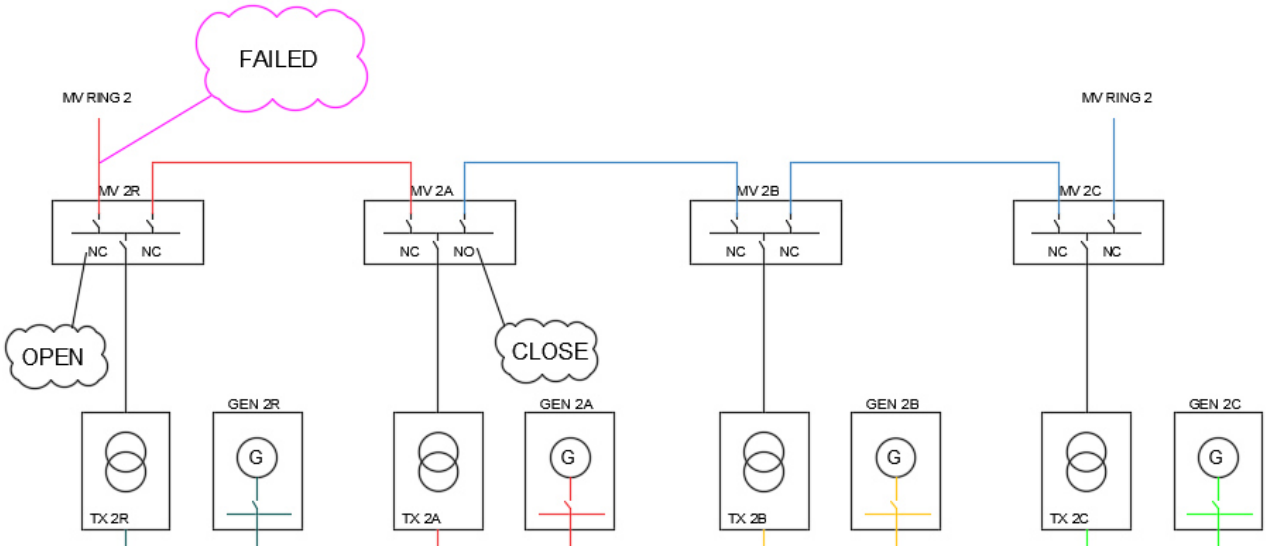

Figure 3. MV Ring 2 maintenance on Substation feeders

4.4. MV Key Interlocks

There will be a Key Interlock System which will protect the operators from making operational mistakes which could lead to dangerous situations. The system is not designed to avoid all possible dangerous circumstances.

For MV ring-1 there is a set of 9 keys and 10 lock slots, for MV ring-2 there is a set of 7 keys and 8 lock slots. Placing the key in a lock will allow the respective switch to be operated and closed. To remove the key from one of the locks the respective switch shall be opened.

Further details are described into Chapter 8.2.

PROPERTY OF DBA S.p.A. NOT USABLE OR REPRODUCIBLE (EVEN IN PART) WITHOUT WRITTEN CONSENT FROM DBA S.p.A.

5. TRANSFORMER - GENERATOR CHANGEOVER

In the following paragraph will be described the sequence of operations from transformer feeder to generator and vice versa managed by an independent Automatic Transfer Switch Controller (ATSC) installed in the main low voltage switchboards:

- PLI (Primary Low Voltage Input switchboard) for primary critical system
- RLI (Reserve Low Voltage Input switchboard) for reserve critical system
- LLI (Landlord Low Voltage Input switchboard) for landlord house system

The ATSC is a separate stand-alone system that will seek any available source during power outage and may be pre-set to allow unattended re-transfer to the transformer source after primary source failure and restoration, or stay on the generator source and re-transfer only in case of generator failure or manual command.

The ATSC will operate in two modes of operation Automatic and Manual. The modes of operations can be toggled by the operator through a two-position switch located on the switchboard ("Transfer Mode" switch)

The ATSC will be supplied by the no-break 24VDC section, derived by the CDB panel.

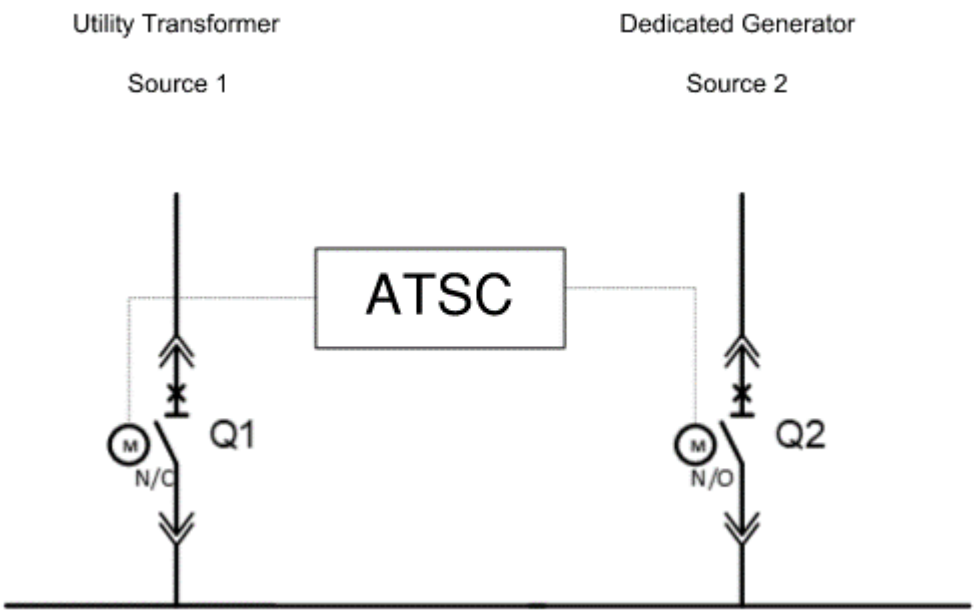

Figure 4. Main LV Switchboard Feeders schematic.

The ATSC controller monitors the conditions of both, the normal transformer source and the standby generator source and commands transfer operations based on which available source is within the pre-set viability limits.

PROPERTY OF DBA S.p.A. NOT USABLE OR REPRODUCIBLE (EVEN IN PART) WITHOUT WRITTEN CONSENT FROM DBA S.p.A.

For both, the normal transformer source and the standby generator source, the nominal voltage is 415V phase-to-phase, the nominal frequency is 50Hz, the nominal voltage balance between phases is 3% (12.5V), and the normal phase rotation is referred to as clockwise.

The source health thresholds in the transfer controller are reflected in *Table 2*.

FUNCTION (ANSI NUMBER)	***THRESHOLD***	***RESET VALUE***
OVERVOLTAGE (59)	110% (456.5V)	105% (435.75V)
UNDERVOLTAGE (27)	80% (332V)	90% (373.5V)
OVERFREQUENCY (81O)	105% (52.5Hz)	102% (51Hz)
UNDERFREQUENCY (81U)	90% (47.5Hz)	95% (49Hz)
GENERATOR FAIL TO START	60 Seconds	
PHASE ROTATION	Counter-clockwise	

Table 2. Voltage and Frequency deviation thresholds.

In Automatic mode, the ATSC will sense conditions of both sources through a phase failure relay and upon expiration of a pre-set time delay, signals the diesel engine to start after different pre-set time delay and then initiate the source 1 breaker to open and then close source 2 breaker. The time delays used in the ATC are reflected in Table 3. Further investigation will be necessary in a next stage on the fast-starting time of the chillers and tanks recharging time requirements.

FUNCTION	***SETPOINT***
DELAY GENERATOR TO START (DGS)	3 second
DELAY GENERATOR ACCEPTANCE (DGA)	1 second
DELAY RETURN TO GRID (DRG)	300 second minimum Additional 2 seconds per subsystem for stagger of transfer
DELAY GENERATOR COOL DOWN (DGC)	1 second (5-minute cooldown controlled by the generator controller)
DELAY OPEN-CLOSE BREAKERS (DOC)	3 seconds
NUMBER OF TRANSFER ATTEMPTS	2
DELAY BETWEEN TRANSFER ATTEMPTS	3 seconds

Table 3. Time Delay functions and setpoints.

The transfer from transformer to emergency generator and vice versa, is an open transition. During this transfer, the critical loads like IT load and other critical power loads are supported by UPSes.

PROPERTY OF DBA S.p.A. NOT USABLE OR REPRODUCIBLE (EVEN IN PART) WITHOUT WRITTEN CONSENT FROM DBA S.p.A.

In Manual mode, the operators are in control of starting and stopping the generator and opening and closing the transformer and generator breakers. When the manual mode is active, multiple operational scenarios are available and are activated through controllers/switches.

Refer to next chapters for detailed steps of operating modes.

5.1. Automatic mode

5.1.1. From Transformer to Generator – AUTO mode

During normal operation, the primary source – transformer supply, will support the load and emergency standby source will be OFF. At the LV main switchboard, the breakers statuses will be as follows: Q1 (Transformer breaker) Close and Q2 (GE breaker) Open.

In case of transformer failure or when voltage/frequency deviates from the pre-set values, the ATSC controller will signal the generator to start and then initiate the Q1 breaker to open and Q2 breaker to close.

Detailed steps during transformer failure and transfer to generator AUTO sequence of operation:

1) Phase failure relay senses voltage or frequency deviations
2) The ATSC starts counting Delay Generator to Start (DGS)
   - in case transformer source is qualified within the time set-up, the sequence should be interrupted
3) Upon expiration of the Delay Generator to Start (DGS), the ATSC generates the signal:
   - start the generator (signal to generator control panel)
4) Generator ramps up to 1500 RPM and attains steady voltage and frequency as pre-set
5) After generator source is qualified, the ATSC starts counting Delay Generator Acceptance (DGA)
   - In case transformer source is qualified within the time set-up, the sequence should be interrupted
6) Upon expiration of the Delay Generator Acceptance (DGA), the ATSC generates two signals:
   - open transformer source breaker Q1
   - start the Delay Open-Close Breakers (DOC)
7) Upon expiration of the Delay Open-Close Breakers (DOC), the ATSC generates two signals:
   - close generator source breaker Q2
   - “load on generator” to UPS, in order to inhibit battery recharge
8) The generator takes over the live load.

PROPERTY OF DBA S.p.A. NOT USABLE OR REPRODUCIBLE (EVEN IN PART) WITHOUT WRITTEN CONSENT FROM DBA S.p.A.

5.1.2. From Generator to Transformer – AUTO mode

When the transformer feeder is returned, ATSC will initiate the Q2 breaker to open and Q1 breaker to close. Then it will stop the generator.

Detailed steps during transformer feeder return and transfer from generator back to transformer AUTO sequence of operation:

9) Phase failure relay senses that transformer feeder is healthy
10) The ATSC starts the Delay Return to Grid (DRG)
    - if there is no inhibit transfer signal present from a UPS module or the Maintenance Bypass Breaker
    - if during this period, the transformer voltage or frequency deviates from threshold limits, the Delay Return to Grid will be restarted the next time the healthy source is available.
11) Upon expiration of the Delay Return to Grid (DRG), the ATSC generates two signals:
    - open generator source breaker Q2
    - start the Delay Open-Close Breakers (DOC)
12) Upon expiration of the Delay Open-Close Breakers (DOC), the ATSC generates two signals:
    - close transformer source breaker Q1
    - start Delay Generator Cool Down (DGC)
13) The ATSC terminates the “load on generator” signal to UPS
14) Upon expiration of the Delay Generator Cool Down (DGC), the ATSC generates a signal to stop the generator (signal to generator control panel)

5.2. Manual mode

5.2.1. From Transformer to Generator – MANUAL mode

With a healthy transformer feeder the operators can manually transfer the load to generator and vice versa. This can be done by setting the switch mode selector to Manual position. In this mode, all operations like starting and running the generator, and opening & closing of breakers, are completely manual.

There is an interlock in place that would prevent the operator from making the mistake of dropping the load or switching both sources in parallel. This is obtained through electrically controlled interlocks of the transformer source breaker Q1 and standby generator source breaker Q2 at main LV switchboard: the two breakers cannot be closed at the same time.

During manual mode, the automatic timer for delays and other protections will be partially or fully inactive as detailed below:

- Time delay for any transfer of power between sources is a manual delay function
- Generator Start and Stop function is manual (through a dedicated switch)

PROPERTY OF DBA S.p.A. NOT USABLE OR REPRODUCIBLE (EVEN IN PART) WITHOUT WRITTEN CONSENT FROM DBA S.p.A.

- Dropping a Load bank before picking up business load is a manual function

Non-transfer controller functions like Generator Overload, cutting off UPS battery charging, inhibit transfer from UPS or Maintenance Bypass Breaker, battery cabinet thermal runaway monitoring, breaker trip etc remain active during manual mode.

Detailed steps during transfer to generator MANUAL sequence of operation:

1) Check if the transformer feeder is healthy and set “Transfer Mode” switch to “Manual”
2) Check if the UPSses are free of alarms and batteries are fully charged
3) Set the “Retransfer Mode” switch to “Manual”
4) Set “Generator Control” switch to “Run”. This will turn ON the generator
5) Once the generator starts and reaches 1500 RPM, and builds up frequency and voltage (visible through lamp indication), manually switch the transformer source breaker Q1 to open. The transformer Breaker Q1 is opened
6) Wait for 3 sec before proceeding to next step
7) Once the 3sec delay is complete, manually switch the generator source breaker Q2 to close. The standby source breaker Q2 is closed
8) The generator takes over the live load

5.2.2. From Generator to Transformer – MANUAL mode

Detailed steps during transfer from generator back to transformer MANUAL sequence of operation:

9) Check if the transformer feeder is healthy. Check if the UPSses are free of alarms
10) Manually switch the generator source breaker Q2 to open. The Standby Source Breaker Q2 is opened
11) Wait for 3 sec before proceeding to next step
12) Manually switch the transformer source breaker Q1 to close. The transformer breaker Q1 is closed.
13) Now the load is transferred from generator to transformer.
14) Set “Generator Control” switch to “Stop”. Then from the local generator controller, the generator cool down timer will start. Upon expiry of the timer, generator is turned OFF.

5.3. Load Bank test for generator

As part of maintenance procedure there is the possibility to load test the standby generators with a mobile load bank. The load bank will be temporarily connected through powerlock connectors to the Generator Switchboard located within the GenSet container.

PROPERTY OF DBA S.p.A. NOT USABLE OR REPRODUCIBLE (EVEN IN PART) WITHOUT WRITTEN CONSENT FROM DBA S.p.A.

Load bank is a mix of resistive and reactive load able to provide a power factor of 0.8 lagging and shall be sized enough to test the generator of capacity rated at 3000 kW maximum, 415 V, 50 Hz.

Detailed steps during generator load test:

1) Check if the transformer feeder is healthy. Check if “Transfer Mode” is on “Auto”
2) Check if the load bank is connected to the powerlock connectors
3) Start the generator manually from the Generator Control panel
4) Wait the generator starts and reaches 1500 RPM, and builds up frequency and voltage
5) Transfer gradually the load from the load bank controller (detailed procedure to be confirmed with Load Bank provider)

Detailed steps during return to normal after generator load test completed:

6) Reduce gradually the load from the load bank controller (detailed procedure to be confirmed with Load Bank provider)
7) Turn OFF the generator manually from the Generator Control panel
8) Generator cool down delay will start
9) Upon expiration of cool down timer, the generator is turned OFF

There is a safety protection for the Data Center load during the load test of Generator. If a transformer feeder failure is detected by the ATSC, a signal “Load Bank Dump” will be generated and send to the Generator Control Panel. This signal could be duplicated from the output of the ATSC “start generator” and hardwired connected to the CAMLOCK connection dedicated to the signals. Then, through signal temporary cable, the Load Bank should be connected to the generator Control Panel as well as the power temporary cables.

ATSC then will follow Chapter 5.1.1 for the automatic transfer to generator.

See figure below for detail on Load Bank temporary connections.

PROPERTY OF DBA S.p.A. NOT USABLE OR REPRODUCIBLE (EVEN IN PART) WITHOUT WRITTEN CONSENT FROM DBA S.p.A.

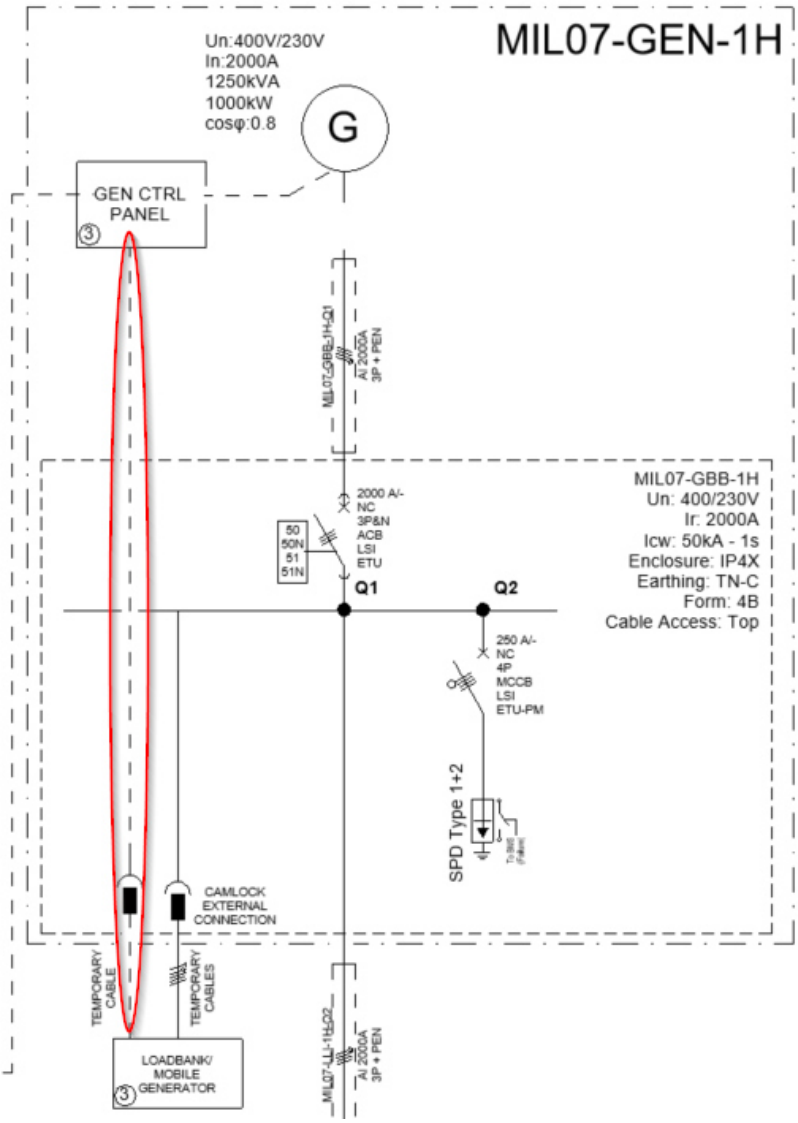

Figure 5. Generator Load Bank temporary connection schematic.

5.4. Failure scenario

In this paragraph some possible failure scenario during the changeover will be described:

5.4.1. Source breakers fail to open

If ATSC controller generates the signal to open the transformer breaker Q1 and the open status is not proven, an alarm “Fail to open” will be generated to EPMS and no close command to generator breaker Q2 will happen. The operator shall perform manual switching to generator source, otherwise the system will wait until the utility returns. Without operator intervention, critical load runs on UPS until the battery discharges completely.

PROPERTY OF DBA S.p.A. NOT USABLE OR REPRODUCIBLE (EVEN IN PART) WITHOUT WRITTEN CONSENT FROM DBA S.p.A.

If the generator breaker Q2 fails the opening command, an alarm “Fail to open” will be generated to EPMS; the ATSC will not start the delay time and will not close the transformer feeder breaker, so the load will continue to be fed by the generator. The operator shall perform manual switching to transformer source, otherwise the system will continue on generator.

5.4.2. Source breakers fail to close

If ATSC generates the signal to close the transformer breaker Q1 and the close status is not proven, the ATSC try to re-close twice. Once two unsuccessful attempts, an alarm “Fail to close” will be generated to EPMS. The generator breaker Q2 will reclose. The operator shall perform manual switching to transformer source, otherwise the system will continue on generator.

If ATSC generates the signal to close the generator breaker Q2 and the close status is not proven, the ATSC try to re-close twice. Once two unsuccessful attempts, an alarm “Fail to close” will be generated to EPMS. The operator shall perform manual switching to generator source, otherwise the system will wait until the utility returns. Without operator intervention, critical load runs on UPS until the battery discharges completely.

5.4.3. Generator failures

If ATSC generates signal “generator to start” and the voltage/frequency are not built up within a pre-set time of 5 seconds, an alarm “Generator failed to start” will be generated to EPMS. The operator shall resolve the issue on generator, otherwise the system will wait until the utility returns. Without operator intervention, critical load runs on UPS until the battery discharges completely.

If during a transformer outage with the Data Center load on generator, the generator source has voltage/frequency deviations, the ATSC generates signal “generator failure” to EPMS. Breaker Q2 will be open. The operator shall restart the generator after inspection, otherwise the system will wait until the utility returns. Without operator intervention, critical load runs on UPS until the battery discharges completely.

PROPERTY OF DBA S.p.A. NOT USABLE OR REPRODUCIBLE (EVEN IN PART) WITHOUT WRITTEN CONSENT FROM DBA S.p.A.

6. STS CHANGEOVER OPERATION

STS Units supplied by the Primary Critical Systems (1A, 1B, 1C, 2A, 2B and 2C) feeds the IT load installed into Data Halls.

Every STSes have their primary source from a UPS section of Primary Critical Systems and secondary (redundant) from the UPS section of Reserve Critical System, through a busbar reserve system. The changeover between the two sources is automatic without open transition. An interlock is embedded to prevent closing both incoming feeds simultaneously and unintentionally connecting two systems together.

Each STS supplies a maximum of 1MW load in the Data Halls, rated at 1600 A – 400V / 230V. Every Primary Critical Systems feed two STSes in normal condition. Figure 6 shows the overall configuration of the STSes dedicated to the total 12MW IT Load (two Data Halls).

The configuration ensures the N+1 redundancy among the IT load distribution. Where +1 refers to Reserve Critical System 1R, with a 3200A rated busbar system, able to feeds up to 2xSTSes, max 2MW IT Load.

In case of the second Data Hall will be located to a different tenant requiring N+1 redundancy independently, a second reserve critical system will be provided (2R).

PROPERTY OF DBA S.p.A. NOT USABLE OR REPRODUCIBLE (EVEN IN PART) WITHOUT WRITTEN CONSENT FROM DBA S.p.A.

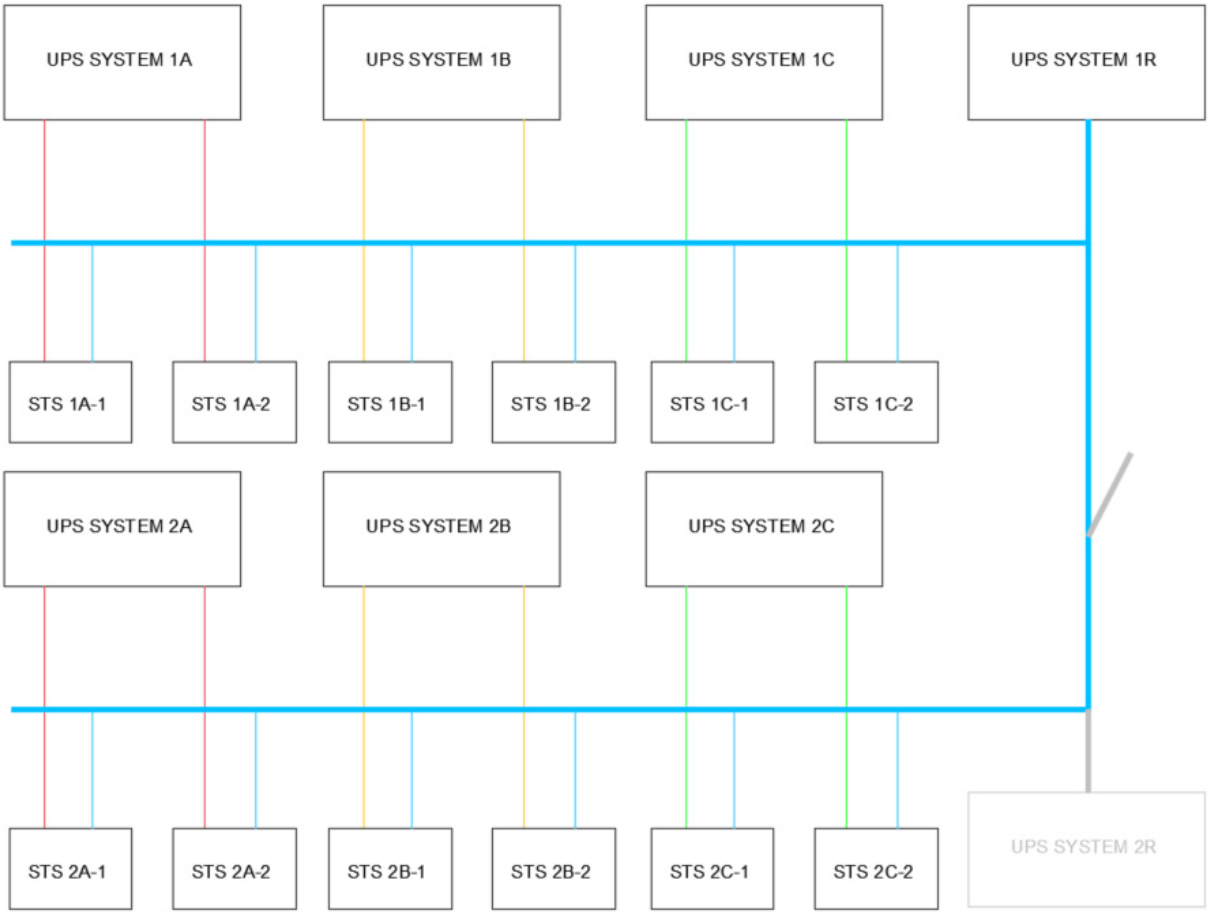

Figure 6. STS configuration for 12MW IT Load, supplied by their dedicated line-up and reserve busbar.

6.1. STS Operation mode

STSes will fully automatically transfer between the primary and secondary sources based on events during operation. The preferred source on each STS will be set as primary source (from the related line-up).

In order to prevent overload on the reserve system, two PLC panels will be installed for monitoring and inhibit STS automatic operations. These PLCs are connected to all the STSes communication module in a ring, making it possible for the PLCs to communicate with each other. In a whole plant operation where both Data Hall 01 and Data Hall 02 are backed-up by one reserve system, the loop involves all STSes in the plant. There could be a temporary connection, to complete the ring just over STSes dedicated to Data Hall 01 for the duration that phase 2 is being commissioned and completed. These two PLCs offer hot-redundancy to the STS monitoring system.

The PLCs will receive signals from STSes regarding the status of the sources, so the system will know if some STS is powering the load through the primary or secondary feeder.

PROPERTY OF DBA S.p.A. NOT USABLE OR REPRODUCIBLE (EVEN IN PART) WITHOUT WRITTEN CONSENT FROM DBA S.p.A.

The PLCs will send signals to STSes in case of inhibition required in order to prevent reserve system overload.

6.1.1. Primary Critical System UPS failure

In case of failure on a Primary Critical System UPS section, the related STSes will transfer the load to the secondary feeder (1R busbar reserve).

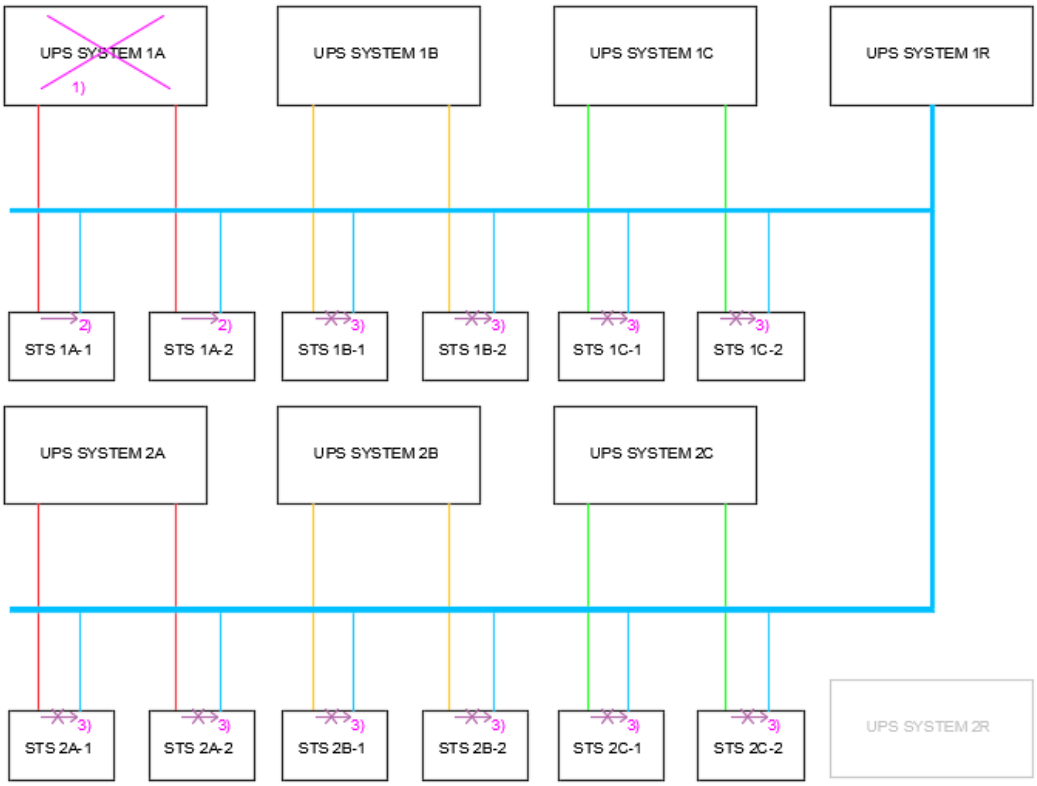

Figure 7. Primary Critical System UPS failure.

With reference to Figure 7, the following steps happens during this failure:

1) Failure of one Primary Critical System
2) The related STSes will lose their primary power source and will transfer the load to the secondary source. Then will send a dry contact to the PLCs "Load on secondary source"
3) Once PLC receive any of two STSes on secondary sources, this means that Reserve critical System 1R is possibly feeding the max rated load of 2MW IT. The PLC will inhibit all the other STSes in the system

After a Primary Critical System failure, the electrical critical plant guarantees only the N capacity for the overall 12MW IT, losing system redundancy.

PROPERTY OF DBA S.p.A. NOT USABLE OR REPRODUCIBLE (EVEN IN PART) WITHOUT WRITTEN CONSENT FROM DBA S.p.A.

6.1.2. Primary Critical System Busbar failure

In case of failure on a Primary Critical System Busbar, the related STSes will transfer the load to the secondary feeder (1R busbar reserve).

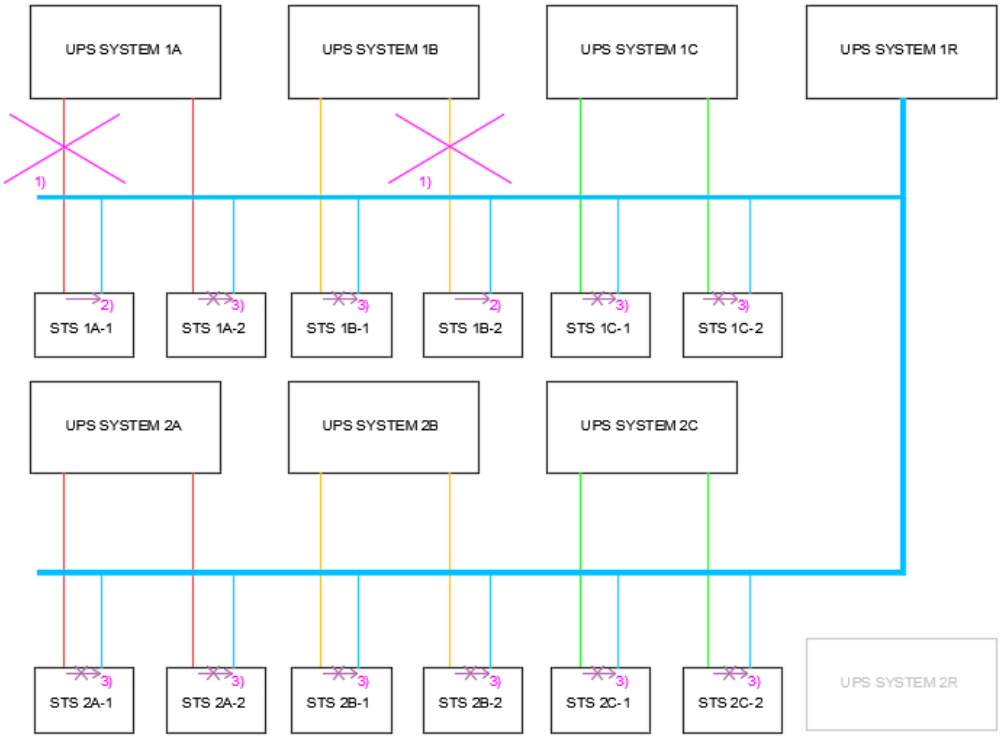

Figure 8. Primary Critical System Busbars failure.

With reference to Figure 8Figure 7, the following steps happens during this failure:

1) Failure of a busbar in a Primary Critical System (also different system busbar could be affected)
2) The related STSes will lose their primary power source and will transfer the load to the secondary source. Then will send a dry contact to the PLCs "Load on secondary source"
3) Once PLC receive any of two STSes on secondary sources, this means that Reserve critical System 1R is possibly feeding the max rated load of 2MW IT. The PLC will inhibit all the other STSes in the system

The system is able to backed-up up to <u>two</u> Primary Critical System busbars failure.

6.1.3. Second Reserve Critical System future installation

In case of the second Data Hall will be located to a different tenant requiring N+1 redundancy independently, a second reserve critical system will be provided (2R). The 1R Reserve busbar system will be disconnected from Phase 2 STSes and 2R system will be connected instead.

PROPERTY OF DBA S.p.A. NOT USABLE OR REPRODUCIBLE (EVEN IN PART) WITHOUT WRITTEN CONSENT FROM DBA S.p.A.

PROPERTY OF DBA S.p.A. NOT USABLE OR REPRODUCIBLE (EVEN IN PART) WITHOUT WRITTEN CONSENT FROM DBA S.p.A.

7. FANWALL UNITS ATS CHANGEOVER OPERATION

Similar to STS described in the previous chapter, FanWall Units have their primary source from a UPS section of Primary Critical Systems and secondary (redundant) from the UPS section of Reserve Critical System, through two mechanical busbar systems. The changeover between the two sources is automatic with an open transition. An interlock is embedded to prevent closing both incoming feeds simultaneously and unintentionally connecting two systems together.

Every Primary Critical Systems feed five FWU in normal condition. Figure 9 shows the overall configuration of the FanWall unit dedicated to two 6MW IT Data Halls. The configuration ensures the N+1 electrical redundancy among the feeders distribution.

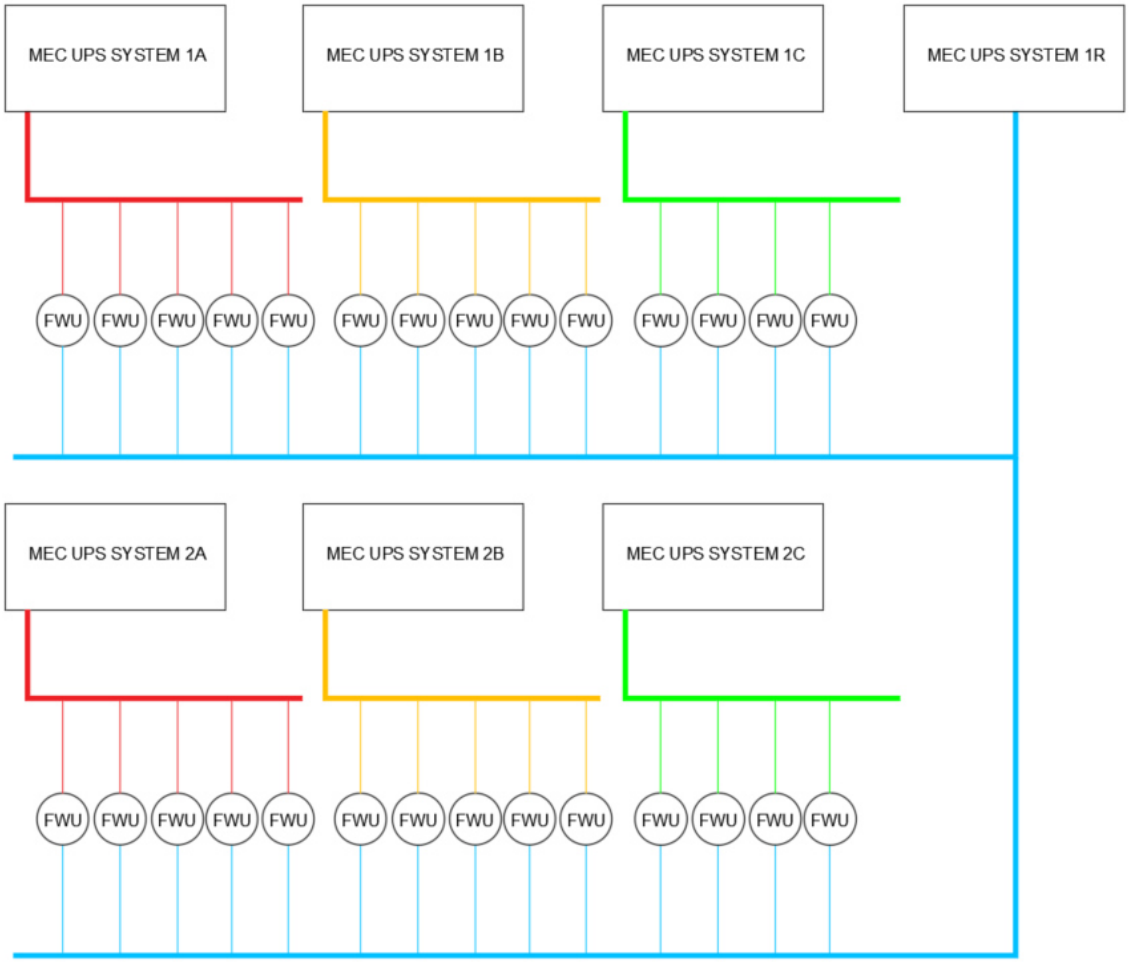

Figure 9. ATS FanWall units configuration for 2x6MW IT Data Halls, supplied by their dedicated line-up and reserve busbar.

PROPERTY OF DBA S.p.A. NOT USABLE OR REPRODUCIBLE (EVEN IN PART) WITHOUT WRITTEN CONSENT FROM DBA S.p.A.

7.1. FWU ATS Operation mode

ATSes will fully automatically transfer between the primary and secondary sources based on events during operation. The preferred source on each ATS will be set as primary source (from the related line-up).

All the FanWall units will be connected in a communication loop through vendor provided bus. This is required according BMS Sequence of Operations, to manage Teams Mode to control the cooling system inside Data Hall. There will be a Master FanWall unit able to control the whole system.

In order to prevent overload on the reserve system, the FW units will also share information regarding the status of ATS embedded. The Master FWU will command the other units in case of inhibition required in order to prevent reserve system overload. There can be max. 5 units powered by reserve busbar. Once 5 x ATSes send signal “Load on secondary source”, all the other ATSes in the plant will be inhibited.

PROPERTY OF DBA S.p.A. NOT USABLE OR REPRODUCIBLE (EVEN IN PART) WITHOUT WRITTEN CONSENT FROM DBA S.p.A.

8. KEY INTERLOCK SYSTEM

The Key Interlock System will protect the operators from making operational mistakes which could lead to dangerous situations. The system is not designed to avoid all possible dangerous circumstances. Any operator must be trained to understand the Sequence of Operations (SoO) and the total system before any switchgear is operated.

Interlock Keys shall have unique numbers, there are multiple slots with the same coding. Codes are based on the specific line-up system with a follow-up numbering. E.g. for the 1A line-up, all codes shall start with 1A.

In addition, some breakers are equipped with an Interlock or an Intertrip, inhibiting other breakers when a particular breaker is closed or making sure that critical parts of the systems are de-energized when an incident occurs.

8.1. MV Earth switch Interlocks between MV Campus substation and RMUs

To avoid putting the first breaker of the ring in the “earthing position” with the MV campus Substation feeder still active, an “earthing” key interlock is requested between the two protections:

- MV-SWB feeder breakers will be provided with key trapped when the earth switch is open. Closing the switch will release the key.
- MV RMU breaker will be provided with key trapped when the earth switch is close. Opening the switch will release the key.

In case of disconnection of the MV-SWB-1 Ring2 feeder, the sequence will be the following:

1) Open the MV breaker in the MV-SWB-1 campus substation
2) Close the earthing disconnector of that breaker
3) Now the key is released and can allow to close the earthing disconnector in the RMU
4) Open the incoming RMU breaker Q1 inside the PCM-2A switchboard
5) Insert key in the earth switch lock and close the earth disconnector

See figure below for trapped keys position.

PROPERTY OF DBA S.p.A. NOT USABLE OR REPRODUCIBLE (EVEN IN PART) WITHOUT WRITTEN CONSENT FROM DBA S.p.A.

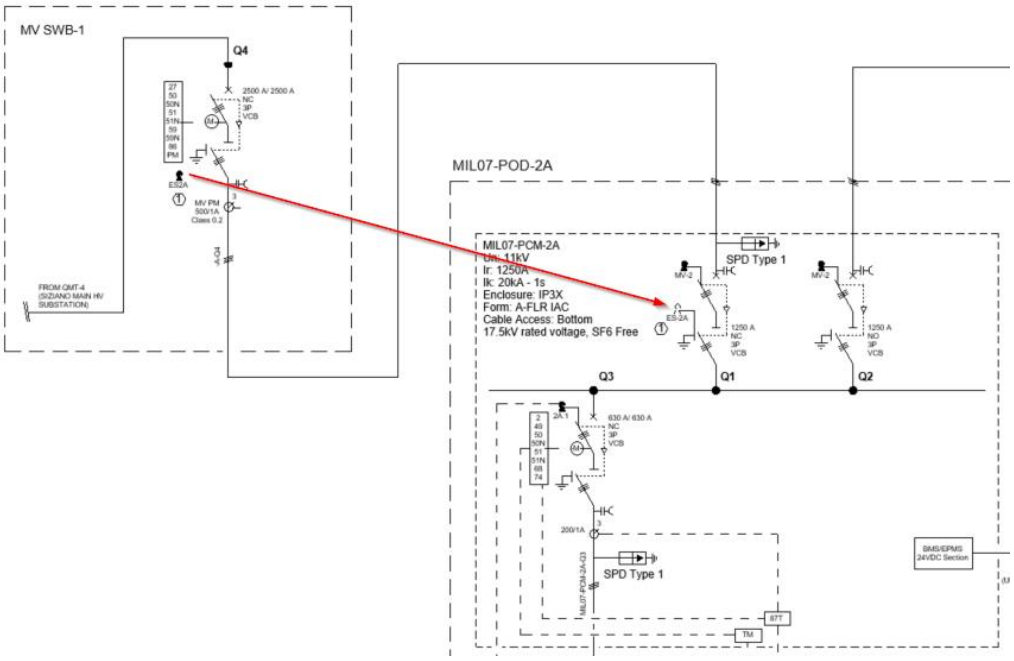

Figure 10. MV Earth Switch Key Interlock.

8.2. MV RMUs Interlocks

Each loop in and loop out switch on the RMU panel is equipped with a loop specific interlock mechanism. All the interlocks on a given loop are the same with interchangeable keys. The keys on one loop will not exchange with any other loops.

The purpose of this interlock is to keep the loop open on at least one load switch location of the RMU switchboards in a ring. For MV ring-1 there is a set of 9 keys and 10 lock slots, for MV ring-2 there is a set of 7 keys and 8 lock slots. Placing the key in a lock will allow the respective switch to be operated and closed. To remove the key from one of the locks the respective switch shall be opened. Figures below show Open-Close and Trapped keys during normal operation.

PROPERTY OF DBA S.p.A. NOT USABLE OR REPRODUCIBLE (EVEN IN PART) WITHOUT WRITTEN CONSENT FROM DBA S.p.A.

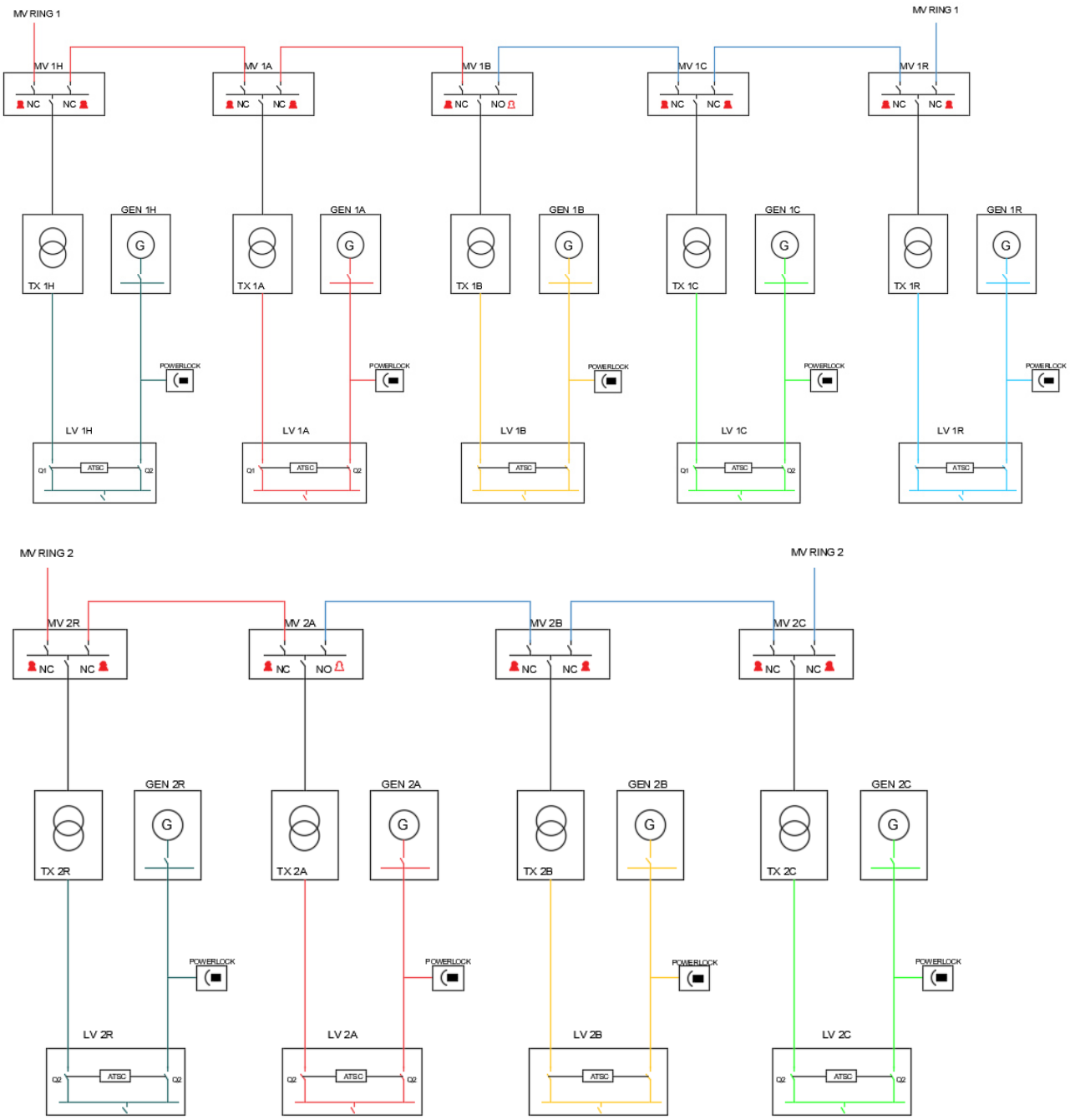

Figure 11. MV RMUs Key Interlocks.

The operator must always check when closing switches that either end of the cable has not been put down to earth. If the switch is closed whilst a cable is down to earth this will result in an instant tripping of the ring.

PROPERTY OF DBA S.p.A. NOT USABLE OR REPRODUCIBLE (EVEN IN PART) WITHOUT WRITTEN CONSENT FROM DBA S.p.A.

8.3. MV Transformer door interlock

The MV/LV transformer is placed in a dedicated room and it is powered by the MV switchboard RMU, located in an adjacent room. The transformer door is locked and can only be opened when a castell key system is trapped.

There will be two keys, one on the transformer MV breaker and one on the LV main transformer breaker within LV Main switchboards:

- Once Q3 MV breaker is open and earthed, key 1A.1 is released
- Once Q1 LV breaker is open, key 1A.2 is released
- 1A.1 and 1A.2 keys will be inserted in the castell key system and door can be opened

See figure below for trapped keys position.

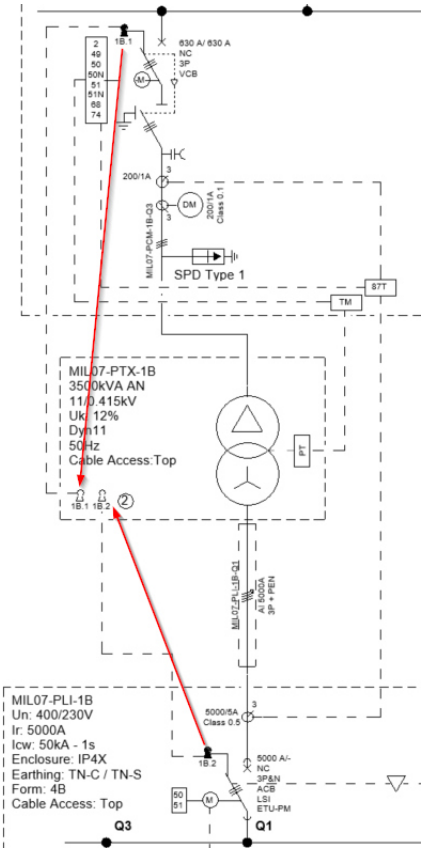

Figure 12. MV Transformer door interlock.

8.4. UPS Maintenance bypass interlock

To perform maintenance work on the UPSes, for critical and mechanical, first the UPS must be set to Maintenance Bypass, and the coupling breaker in the output panel must be opened.

To set the UPS into maintenance bypass, first the UPS must be set to Static (Internal) Bypass.

PROPERTY OF DBA S.p.A. NOT USABLE OR REPRODUCIBLE (EVEN IN PART) WITHOUT WRITTEN CONSENT FROM DBA S.p.A.

The vendor shall do this by a KIS for the UPSes of the Critical and Mechanical load. With reference to figure below:

1. Setting the UPSes to internal Static bypass releases Key. Once this key is removed the transfer to the static bypass is inhibited. The key shall be inserted now in the empty slot at the External Maintenance Bypass Breaker Q15. This will allow to close the breaker and transfer the critical load to the bypass feed

For the critical IT power blocks, in addition to interlocking explained above, it is also provided with an interlock for the purpose of load bank test of the UPS.

Once the load is on Bypass feeder:

2. Open the UPS Output breaker Q20 and release the key. The key shall be inserted now in the empty slots at the key solenoid key realy, setting UPSes back to Double Conversion Mode, and prepare it for testing against a loadbank.
3. Finally, Q23 Load Bank breaker can be closed since the breaker Q20 is now open.

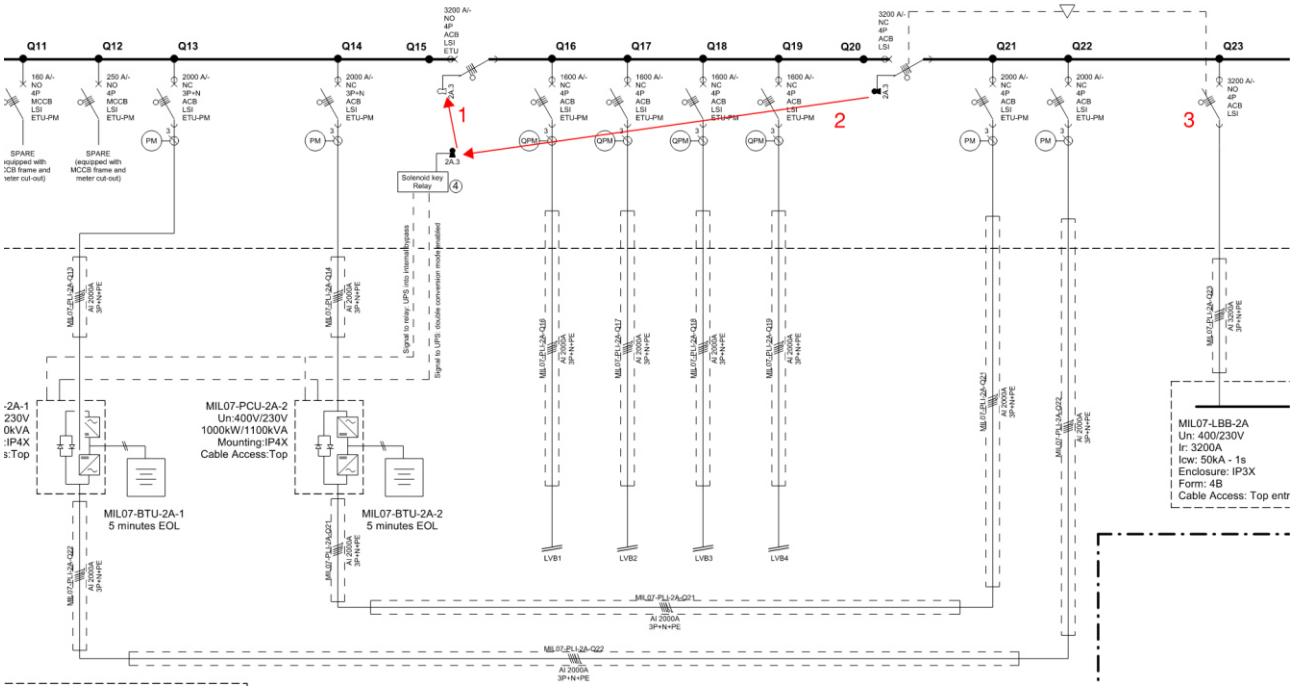

Figure 13. UPS Maintenance bypass Interlock.

PROPERTY OF DBA S.p.A. NOT USABLE OR REPRODUCIBLE (EVEN IN PART) WITHOUT WRITTEN CONSENT FROM DBA S.p.A.

9. Emergency Power Off system (EPO)

In case of emergency inside the building, it will be possible to de-energize all the power lines through some emergency power off pushbuttons placed inside the fire command room FCR01 in the data center building.

The design provides 9 EPOs.

The EPOs works on devices for the permanent control of the safety circuits as shown in the drawing MXP07-DBA-XX-XX-DW-E61711-Schematic-Emergency Power Off System.pdf. The emergency stop allows to interrupt the power supply to a system in a safe and immediate way.

Below the list of EPOs and the circuit switched off:

- MIL07-EPO-MV_RING1: the MV SWB-1 panel inside MV substation path A is swithced off. The first MV feeder will be de-energized
- MIL07-EPO-MV_RING2: the MV SWB-2 panel inside MV substation path B is swithced off. The second MV feeder will be de-energized
- MIL07-EPO-DATA_HALL_1: all the MV trafo protections of the critical PODs of the first ring: A1, B1, C1 systems will be tripped, as well as the related diesel generators. The data hall 1 results completly switched off.
- MIL07-EPO-DATA_HALL_2: all the MV trafo protections of the critical PODs of the second ring: A2, B2, C2 systems will be tripped, as well as the related diesel generators. The data hall 2 results completly switched off.
- MIL07-EPO-SYSTEM_1R: The main incomers and the UPSes of the reserve system 1R will be de-energized. Since the system 1R will cover both data halls as far as the second reserve will be installed, a dedicated EPO is required.
- MIL07-EPO-SYSTEM_1H: The housing services, except for the fire extraction system, will be switched off.
- MIL07-EPO-SMOKE_ EXTRACTION: a specific pushbutton to switch off the feeder to the fire extraction plant
- MIL07-EPO-SPRINKLER: a specific pushbutton to switch off the sprinkler pumps
- MIL07-EPO-EM_LIGHT: a specific pushbutton to switch off the two CPSS for the emergency lighting service

The activation of one EPO results in a lack of power supply of all the loads feed by the powerblock itself, and of a complete switch off the data center in case of activation of all of them.

PROPERTY OF DBA S.p.A. NOT USABLE OR REPRODUCIBLE (EVEN IN PART) WITHOUT WRITTEN CONSENT FROM DBA S.p.A.

STACK INFRASTRUCTURES

Via Lombardia 1, Siziano, Milan, Italy

MIL07

Statement of Requirements

MIL07-DBA-XX-XX-RP-E-60002

07/11/2025

Status - S4 (Suitable for Stage Approval)

Project Number 13038001

Nome File: MIL07-DBA-XX-XX-RP-E-60002 - Statement of Requirements.docx

PROPERTY OF DBA S.p.A. NOT USABLE OR REPRODUCIBLE (EVEN IN PART) WITHOUT WRITTEN CONSENT FROM DBA S.p.A.

Branch Office
DBA
Via Natale Battaglia, 10
20127, Milano
Italiy
+39 02 5829821
dbaprogetti@pec.dbagroup.it
www.dbagroup.it

Head Office
DBA S.p.A.
Piazza Roma, 19
32045, Santo Stefano di Cadore (BL)
Italiy
+39 0422 693511
dbaprogetti@pec.dbagroup.it
www.dbagroup.it

Project:	MIL 07
Site Adress:	Via Lombardia 1, Siziano, Milan, Italy
Document Title:	Statement of Requirements
Document Code:	MIL07-DBA-XX-XX-RP-E-60002
File Name:	MIL07-DBA-XX-XX-RP-E-60002 - Statement of Requirements.docx
Revision Date:	07/11/2025
Revision descritption:	S4 – Riba 3 Submittal
Purpose of Issue:	13038001
Author:	Sacha Busetti
Edited by:	Michele Pizzolon
Checked by:	Stefano Soncini
Approved by:	Sacha Busetti

Revision History:

REV.	RED.	CONTR.	APP.	DATA	DESCRIZIONE
P01	MPI	SSO	SBU	07/11/2025	S4 – Riba 3 Submittal

DBA. S.p.A. All rights and related copyright are reserved and owned by DBA. S.p.A. This document is the property of DBA. S.p.A. and may not be duplicated or published without written permission in whole or in part or be used for other purposes other than those indicate

INDEX

1. LV SECONDARY PANELS 4
2. CABLE CONTAINMENT 5
2.1. Type of cable containment 5
2.2. Hangers, support and transit 6
3. BUSBARS 6
4. CABLES 8
4.1. Medium voltage cables 8
4.2. Low voltage cables 8
4.3. Extra Low voltage cables 10
4.4. Bus cables 10
5. CPSS 11
5.1. 1500 W CPSS – Office building 11
5.2. 6000 W CPSS – Data halls 12
6. MV AND LV DUCTS 13
6.1. LV ducts 13
6.2. MV ducts 14
7. EARTHING AND BONDING 14
7.1. Earthing cables 14
7.2. Surge protection 15
8. LIGHTNING PROTECTION SYSTEM 16
8.1. HVI long conductor 16
8.2. CUI conductor 16
8.3. Round steel wires 17
8.4. Accessories 17
9. VENDOR LIST 18

PROPERTY OF DBA S.p.A. NOT USABLE OR REPRODUCIBLE (EVEN IN PART) WITHOUT WRITTEN CONSENT FROM DBA S.p.A.

1. LV SECONDARY PANELS

Secondary distribution boards are those panels positioned downstream in the electrical system, supplying energy directly to final circuits such as small power, lighting and smaller mechanical loads.
Their designations - such as MDB, GDB, ODB, CDB - indicate the type and location of the electrical loads they feed.
At this stage of the design, secondary distribution boards are shown only as aggregated loads within the main single-line diagrams. Their detailed configuration, internal arrangement, and circuit breakdown will be developed in the subsequent design phases, whereas for now they are represented simply by their overall load contribution to the upstream boards.

General data

The panel enclosures shall be of the modular type, built with Form 2b internal separation., and For indoor panels, the minimum degree of protection of IP3X, while outdoor panels will be IP65. The impact withstand degree will be IK10.

Equipment columns may be configured up to 800 mm in width, while cable-riser columns may reach up to 400 mm. The enclosure dimensions shall not exceed 2000 mm in height and 400 mm in depth.
All the framework and panel parts shall be treated with polymerised, epoxy-polyester powder. The internal parts (mounting plates, partitions, and screens) shall be made of galvanized steel sheet. The rear closing plates could be made of galvanized sheet metal. The installation of the panels shall meet the requirements of pollution degree 3. Panels shall be floor mounted.
The switchboard must be verified by testing in accordance with IEC 61439-1/2.

Standard panel equipment

- Surge protection device: Type II
- Three-phase indicator lamps (LED) on the front panel to display the status of the incoming supply
- Multifunction power meter for electrical measurements

Main electrical data

- Rated voltage: 400 V
- Design: 3 phases + neutral + PE
- Minimum capacity: 63A
- Frequency: 50 Hz
- Earthing system: TN-S
- Maximum short circuit capacity:
    - 10 kA for panels located outside PODs
    - 36 kA for panels located inside PODs

PROPERTY OF DBA S.p.A. NOT USABLE OR REPRODUCIBLE (EVEN IN PART) WITHOUT WRITTEN CONSENT FROM DBA S.p.A.

- Typical power factor (cos phi): 0.9
- Rated insulation voltage (Ui): 2.5kV
- Rated short time withstand current Icw:
  - 10 kA for panels located outside PODs
  - 36 kA for panels located inside PODs
- Rated peak allowable current Ipk:
  - 22 kA for panels located outside PODs
  - 80 kA for panels located inside PODs

2. CABLE CONTAINMENT

2.1. Type of cable containment

Regarding metallic cable containment bends, jumps, and connections to switchboards, only special parts provided by the cable containment supplier shall be used; no alternative solutions are permitted.

LV power and signal cables – Cable ladder

- Material processing
  - indoor sections: Sendzimir zinc coating
  - outdoor sections: hot-dip galvanization
- Dimensions: height 100mm, see model for width
- Accessories: with cover, with sendzimir process divider only where necessary
- Adopted in:
  - POD containers internal distribution
  - POD-to-chillers power path

LV power and signal cables – Cable tray

- Material processing
  - indoor sections: Sendzimir zinc coating
  - outdoor sections: hot-dip galvanization
- Dimension: height 100mm, see model for width
- Accessories: with cover and galvanised steel, with sendzimir process divider only where necessary
- Adopted in:
  - POD containers internal distribution
  - Building internal distribution

PROPERTY OF DBA S.p.A. NOT USABLE OR REPRODUCIBLE (EVEN IN PART) WITHOUT WRITTEN CONSENT FROM DBA S.p.A.

2.2. Hangers, support and transit

Hangers and supports with anti-seismic function in according with the seismic requirements for cable ways and busbar. For the internal equipment installation, the formula C.7.2.11 of "Circolare January 2019 nr. 7 CSLLPP must be applied with the following values:

- Acceleration = 0.069 g
- S factor = 1.5

The support shall be of different type in function of the architectonic shape and the weight. The supports created must carry cable trays, cable ladders and busbars.

The transit shall be created by the general contractor in compliance with the BIM model. A certified sealing system should be used to to maintain the EI degree of the fire wall. Intumescent bags are not permitted.

3. BUSBARS

Nominal current 5000 A

- IP rating: IP55 for indoor sections / IP68 for outdoor sections
- Conductor material: Aluminum (housing in aluminum)
- Conductors number: 3P + PEN (4 conductors)
- Rated isolation voltage: 1000 Vac
- Rated short time withstand current (1s – 3ph) Icw: 100 kA
- Rated peak withstand current Ipk: 220 kA
- Rated power loss at 35°C: 880.7 W/m
- Compliant with IEC 61439-6 standard
- Special parts as per BIM model
- Adopted in:
    - Engine generator-to-POD distribution (for Critical and Reserve systems)
    - POD internal distribution (for Critical and Reserve systems)

Nominal current 3200 A

- IP rating: IP55 for indoor sections / IP68 for outdoor sections
- Conductor material: Aluminum (housing in aluminum)
- Conductors number: 3P + PE + N (5 conductors)
- Rated isolation voltage: 1000 Vac
- Rated short time withstand current (1s – 3ph) Icw: 100 kA
- Rated peak withstand current Ipk: 220 kA
- Rated power loss at 35°C: 594.8 W/m

PROPERTY OF DBA S.p.A. NOT USABLE OR REPRODUCIBLE (EVEN IN PART) WITHOUT WRITTEN CONSENT FROM DBA S.p.A.

- Compliant with IEC 61439-6 standard
- Special parts as per BIM model
- Adopted in:
    - POD internal distribution (for Critical and Reserve systems)

Nominal current 2000 A

- IP rating: IP55 for indoor sections / IP68 for outdoor sections
- Conductor material: Aluminum (housing in aluminum)
- Conductors number:
    - Critical and Reserve systems: 3P + PE + N (5 conductors)
    - Admin systems: 3P + PEN (4 conductors)
- Rated isolation voltage: 1000 Vac
- Rated short time withstand current (1s – 3ph) Icw: 80 kA
- Rated peak withstand current Ipk: 176 kA
- Rated power loss at 35°C: 327 W/m
- Compliant with IEC 61439-6 standard
- Special parts as per BIM model
- Adopted in:
    - Admin systems: Engine generator-to-POD distribution
    - Critical, Reserv and Admin systems: POD internal distribution
    - POD-to-data hall distribution

Nominal current 400 A

- IP rating: IP55 for indoor sections / IP68 for outdoor sections
- Conductor material: Copper (housing in aluminum)
- Conductors number: 3P + PE (4 conductors)
- Rated isolation voltage: 1000 Vac
- Rated short time withstand current (1s – 3ph) Icw: 25 kA
- Rated peak withstand current Ipk: 53 kA
- Rated power loss at 35°C: 61.4 W/m
- Compliant with IEC 61439-6 standard
- Special parts as per BIM model
- Adopted in:
    - POD-to-mechanical gallery distribution

PROPERTY OF DBA S.p.A. NOT USABLE OR REPRODUCIBLE (EVEN IN PART) WITHOUT WRITTEN CONSENT FROM DBA S.p.A.

4. CABLES

4.1. Medium voltage cables

- RG26H1M16
- Conductor: Rigid red copper, class 2
- Insulation: High modulus rubber, G26 quality
- Shielding: Red copper wires with copper tape in counter-spiral
- Outer Sheath: LSZH (Low Smoke Zero Halogen) thermoplastic material, M16 quality, red color
- Voltage Uo/U: 12/20 kV
- Test voltage: 24 kV
- Temperature range
    - Maximum operating temperature: 105°C
    - Maximum short circuit temperature: 300°C
    - Minimum installation and handling temperature: -5°C
    - Minimum operating temperature (without mechanical shock): -20°C
- Reaction to fire
    - CPR classification: Cca
    - Smoke production: s1b
    - Flaming droplets: d1
    - Acidity: a1
- Compliance with Standards: CEI UNEL 35334

4.2. Low voltage cables

POWER CABLES < 35 MM2

- FG16OM16
- Reaction to fire
    - CPR classification: Cca
    - Smoke production: s1
    - Flaming droplets: d1
    - Acidity: a1
- Material: Copper
- Voltage Uo/U: 0.6/1kV
- Colours
    - 1P+N+PE: brown, blue and green/yellow
    - 3P+N+PE: brown, black, grey, blue and green/yellow
- Insulation: multi core cable, HEPR (G16 quality)

PROPERTY OF DBA S.p.A. NOT USABLE OR REPRODUCIBLE (EVEN IN PART) WITHOUT WRITTEN CONSENT FROM DBA S.p.A.

POWER CABLES > 35 MM2

- FG16M16
- CPR classification: Cca
- Smoke production: s1
- Flaming droplets: d1
- Acidity: a1
- Material: Copper
- Voltage Uo/U: 0.6/1kV
- Colours (3P+N+PE): brown, black, grey, blue and green/yellow
- Insulation: single core cable, HEPR (G16 quality)

FIRE RESISTANT POWER CABLES – EMERGENCY LIGHTING

- FTG18(O)M16
- Flexible wire class 5
- Fire resistant rating: 120 minutes
- Reaction to fire
    - CPR classification: B2ca
    - Smoke production: s1
    - Flaming droplets: d1
    - Acidity: a1
- Material: Copper
- Voltage Uo/U: 0.6/1kV
- Colours
    - 1P+N+PE: brown, blue and green/yellow
    - 3P+N+PE: brown, black, grey, blue and green/yellow
- Insulation: G18 rubber compound isolated with thermoplastic outer sheet M16 quality, halogen free not propagating fire with low smoke emission

SIGNAL CABLES

- FG16OM16
- Reaction to fire
    - CPR classification: Cca
    - Smoke production: s1
    - Flaming droplets: d1
    - Acidity: a1
- Material: Copper
- Voltage Uo/U: 0.6/1kV

PROPERTY OF DBA S.p.A. NOT USABLE OR REPRODUCIBLE (EVEN IN PART) WITHOUT WRITTEN CONSENT FROM DBA S.p.A.

- Insulation: multi core cable, HEPR (G16 quality)

4.3. Extra Low voltage cables

FIRE DETECTION AND ALARM SIGNALLING

- FTE29OHM16
- Flexible wire: class 5
- Shielded
- Fire resistant rating: 120 minutes
- Reaction to fire
    - CPR classification: Cca
    - Smoke production: s1b
    - Flaming droplets: d1
    - Acidity: a1
- Material: Copper
- Voltage Uo/U: 100/100V
- Insulation: Cross-linked halogen-free compound (E29)

4.4. Bus cables

RS485 MODBUS CABLE – OUTDOOR APPLICATION

- Conductor: CuSn - 7x0,20mm ø (24/7AWG)
- Insulation: PE
- Fire behaviour: flame retardant according to EN IEC 60332-1-2/A1:2015
- Shielding: AL/PET tape + CuSn drain wire 24/7AWG + CuSn braid (k≥ 90%)
- Outer jacket: LSZH
- Minimum insulation resistance: 2,0 GΩ km
- Max operating voltage: 30 V
- Operating temperature range: -20 °C / +80 °C
- Maximum inner conductor resistance: 85 Ωkm

RS485 MODBUS CABLE – INDOOR APPLICATION

- Conductor: CuSn - 19x0,30mm ø (16/19AWG)
- Insulation: PE
- Fire behaviour: flame retardant according to EN IEC 60332-1-2/A1:2015
- Shielding: AL/PET tape (“Z-foil”) + drain wire CuSn 22/7AWG
- Outer jacket: LSZH

PROPERTY OF DBA S.p.A. NOT USABLE OR REPRODUCIBLE (EVEN IN PART) WITHOUT WRITTEN CONSENT FROM DBA S.p.A.

- Minimum insulation resistance: 2,0 GΩ km
- Max operating voltage: 300 V
- Operating temperature range: -20 °C / +80 °C
- Maximum inner conductor resistance: 54,8 Ω/km

5. CPSS

To manage the emergency lighting in the office building and data halls, a CPSS (Central Power Supply System) solution must be used.

The system shall allow for monitoring and control of the circuits and/or individual emergency luminaires. Cable entry and exit shall be from the top, with floor-mounted installation. The system shall comply with EN 50171, EN 50272-2, and EN 62034 standards.

5.1. 1500 W CPSS – Office building

- General data
  - Power rating: 1.5 kW
  - Service access: front
  - Maximum dimensions (H×W×D): 1000 × 600 × 250 mm
  - Frequency: 50 Hz
  - Operating temperature: +5°C to +40°C
  - Recommended temperature: 20°C to +25°C
- Input
  - Nominal mains input voltage: three-phase 400 Vac / single-phase 230 Vac
- Output
  - Number of controlled circuits: 8
  - Power rating per line: 0.65 kW
  - Nominal output voltage in emergency: 216 Vdc
  - Nominal output voltage with power supply: 230 Vac
- DC Source
  - Battery type: VRLA AGM
  - Number of batteries: 18
  - Permissible battery voltage: 12 V
  - Battery capacity: 12 Ah
  - Charging time (80% capacity): 12 h
  - Battery autonomy: 2 h
  - Battery life: 10 years (20°C – EN 50171, EN 50272-2)
- Accessories
  - I/O card

PROPERTY OF DBA S.p.A. NOT USABLE OR REPRODUCIBLE (EVEN IN PART) WITHOUT WRITTEN CONSENT FROM DBA S.p.A.

- Documentation
  - Datasheet of all components:
  - Operation and maintenance manual
  - Construction drawings (dimensions and weights) showing lifting points and removable parts
  - Transport and installation manual
- Other requests
  - Factory Acceptance Test (FAT)
  - Installation and set-up
  - Post-installation testing assistance

5.2. 6000 W CPSS – Data halls

- General data
  - Power rating: 6 kW
  - Service access: front
  - Maximum dimensions (H×W×D): 1800 × 600 × 465 mm
  - Frequency: 50 Hz
  - Operating temperature: +5°C to +40°C
  - Recommended temperature: 20°C to +25°C
- Input
  - Nominal mains input voltage: three-phase 400 Vac / single-phase 230 Vac
- Output
  - Number of direct lines: 12
  - Power rating per line: 0.65 kW
  - Nominal output voltage in emergency: 216 Vdc
  - Nominal output voltage with power supply: 230 Vac
- DC Source
  - Battery type: VRLA AGM
  - Number of batteries: 18
  - Permissible battery voltage: 12 V
  - Battery capacity: 60 Ah
  - Charging time (80% capacity): 12 h
  - Battery autonomy: 2 h
  - Battery life: 10 years (20°C – EN 50171, EN 62485-2)
- Accessories
  - I/O card
- Documentation
  - Datasheet of all components:

PROPERTY OF DBA S.p.A. NOT USABLE OR REPRODUCIBLE (EVEN IN PART) WITHOUT WRITTEN CONSENT FROM DBA S.p.A.

  - Operation and maintenance manual
  - Construction drawings (dimensions and weights) showing lifting points and removable parts
  - Transport and installation manual
- Other requests
  - Factory Acceptance Test (FAT)
  - Installation and set-up
  - Post-installation testing assistance

6. MV AND LV DUCTS

The cable ducts installation strategy and the manholes are designed to account for possible flooding. The manholes will be of the non-sealed, drain-through type, allowing water to pass freely through both the ducts and the manholes. The cables installed in these routes are suitable for operation in wet conditions. In addition, the gap between the duct entries and the manhole wall shall be sealed using an appropriate sealing system.
The Contractor shall execute all trench work, deliver, and install all ducts on site as shown on the project drawings.

6.1. LV ducts

- Ducts shall be of constant section and composed of round ducts with smooth inside surface. Diameter as indicated on drawings.
- Ducts shall be installed including all facilities for placing and mounting, including supporting structures and covering (sand/concrete). Covering material may not in any case damage or puncture the ducts (gravel is not allowed)
- Ducts will be braced by means of the proper supports in number and type according to the duct specification and length.
- Ducts shall be installed in a protective enclosure and covered with proper material (e.g. sand, concrete) in order to mitigate structural deformation, mechanical stress and mechanical damage, puncture etc.
- Bending radius of the ducts shall be min. 300 mm for telecommunication and for electric conduits as per requirements of laid cables.
- Duct material specifications
  - Duct diameter: As indicated in drawings.
  - Material: PE100, SDR17, PN10
  - Structural strength class N750
- The minimum installation depth from ground level shall be at least 800 mm. If installation depth is less than 800 mm additional protection shall be done.

PROPERTY OF DBA S.p.A. NOT USABLE OR REPRODUCIBLE (EVEN IN PART) WITHOUT WRITTEN CONSENT FROM DBA S.p.A.

- Warning tape shall be installed above every duct. Distance between duct and warning tape shall be at least 200 mm

6.2. MV ducts

- Ducts shall be of constant section and composed of PE100, diameter as indicated on drawings.
- Ducts will be installed including all facilities for placing and mounting, including supporting structures and covering (sand/concrete). Covering material may not in any case damage or puncture the ducts (gravel is not allowed)
- Ducts will be braced by means of the proper supports in number and type according to the duct specification and length.
- Ducts will be laid down in a protective enclosure and covered with proper material (e.g. sand, concrete) in order to mitigate structural deformation, mechanical stress and mechanical damage, puncture etc.
- Bending radius of the ducts is to be 1 meter for telecommunication and for electric conduits as per requirements of cables to use.
- Duct material specifications
    - Duct diameter: As indicated in Drawings.
    - Material: PE100
    - Structural strength class N1250
- The minimum installation depth from ground level shall be at least 800 mm. If installation depth is less than 800 mm additional protection shall be done.
- Warning tape shall be installed above every duct. Distance between duct and warning tape shall be at least 200 mm
- The ducts shall be distinguished from each other by text label (at least on end and crossing points)

7. EARTHING AND BONDING

7.1. Earthing cables

To determine the appropriate type of earthing conductor associated with each piece of equipment to be grounded, refer to the document “MIL07-DBA-XX-XX-CA-E-69001 – Calculation – Earthing & Bonding.”

HEPR INSULATED CABLE

- Type: FG17
- Fire reaction
    - CPR classification: Cca

PROPERTY OF DBA S.p.A. NOT USABLE OR REPRODUCIBLE (EVEN IN PART) WITHOUT WRITTEN CONSENT FROM DBA S.p.A.

  - Smoke production: s1b
  - Flaming droplets: d1
  - Acidity: a1
- Nominal voltage Uo/U: 450/750 V
- Maximum voltage Um: 1000 V
- Conductor material: copper
- Cable cross section: as per design drawings and earth calculations
- Cable termination: Cable lugs

BARE CONDUCTOR

- Material: bare annealed stranded copper according to EN13601
- Rated cross section: as per design drawings and earth calculations
- Bending radius: 6 x maximum external diameter
- Tensile stress: 50 N/mmq

7.2. Surge protection

The surge protections (SPD) must be installed in compliance of the:

- IEC 62305 Protection against lightning;
- IEC 60364 Low-voltage electrical installations;
- IEC 62561 Lightning protection system components;
- IEC 61643 Surge protective devices connected to low-voltage power systems – Requirements and test methods;

In the design there are two types of SPD's:

- Type I: The Type I SPD is recommended in the specific case of service-sector and industrial buildings, protected by a lightning protection system or a meshed cage. It protects electrical installations against direct lightning strokes. It can discharge the back-current from lightning spreading from the earth conductor to the network conductors. Type I SPD is characterized by a 10/350 μs current wave.
- Type II: The Type II SPD is the main protection system for all low voltage electrical installations. Type II SPD is characterized by an 8/20 μs current wave. Installed in each electrical switchboard, it prevents the spread of overvoltage in the electrical installations and protects the loads.

The appropriate SPD should be selected based on the technical characteristics and the installation location of the device. The protective devices must be connected directly to earthing and bonding bars.

PROPERTY OF DBA S.p.A. NOT USABLE OR REPRODUCIBLE (EVEN IN PART) WITHOUT WRITTEN CONSENT FROM DBA S.p.A.

8. LIGHTNING PROTECTION SYSTEM

To protect the building and its equipment a Lightning Protection System Lv.IV must be installed according to IEC 62305.
For further details regarding the risk analysis, please refer to the lightning systems report "MIL07-DBA-XX-XX-RP-E-69001 - Risk Analysis Lightning Protection".
The lightning protection system mainly includes, but it's not limited to:

- HVI long conductor (diameter and length as indicated in the drawings);
- Bare copper conductor running around roof boundary;
- Lightning rods (Height as indicated in the drawings);
- Bare copper down conductors;
- Earthing chamber pit.

The height, position and quantity of the lightning rods are based on the rolling sphere method. The bare copper conductor is connected through appropriate accessories to bare copper down conductors on the outside of the wall. The down conductor is then connected to the earth ring electrode through earth chamber pit at the Ground level.

8.1. HVI long conductor

- Conductor material: Cu
- Insulation material: PE
- Sheath material: PE
- Conductor colour: Black
- Cross-section (stranded): 19 mm²
- Lightning current carrying capability (class / Iimp): H1 / 150 kA
- Equivalent separation distance (in air): ≤ 75 cm
- Conductor diameter: 20 mm
- Coating characteristics: UV-stabilised and weather-resistant
- Standard: DIN IEC/TS 62561-8 (VDE V 0185-561-8)

8.2. CUI conductor

- Material of conductor: Cu
- Material of insulation: XLPE
- Surge withstand capability (1.2/50 µs): 100 kV
- Conductor diameter: 20 mm
- Standard: EN 62561-2
- Cross-section of core: 50 mm²
- Total length: 3500 mm

PROPERTY OF DBA S.p.A. NOT USABLE OR REPRODUCIBLE (EVEN IN PART) WITHOUT WRITTEN CONSENT FROM DBA S.p.A.

8.3. Round steel wires

- Conductor diameter: 8 mm
- Cross-section: 50 mm²
- Material: St/tZn
- Standard: based on EN 62561-2
- Zinc sheath: ≥ 50 µm average (about 350 g/m²)
- Conductivity: ≥ 6.66 m / Ohm·mm²
- Resistivity: ≤ 0.15 Ohm·mm²/m
- Short-circuit current (AC 50 Hz / DC) (1 s; ≤ 300 °C): 3.5 kA

8.4. Accessories

- Supporting tubes for HVI long conductors:
  - Material of air-termination tip: Stainless Steel (StSt)
  - Length of air-termination tip: 1000 mm
  - Material of supporting tube: Glass Reinforced Plastic (GRP) / Aluminum (Al)
  - Length of supporting tube: 3200 mm
  - Transport length: 3200 mm
  - Outside diameter: Ø 50 mm
  - Length of insulating clearance: 1535 mm
  - Wall thickness: 4 mm
  - Material factor (km): 0.7
  - Permanent temperature range: -50 °C to +100 °C
  - Type: UV-stabilised
  - Sleeve dimensions: 60 x 5 mm
  - Standard: DIN IEC/TS 62561-8 (VDE V 0185-561-8)

- Conductor holder for flat roofs:
  - Material of conductor holder: Stainless Steel (StSt)
  - Conductor support diameter: 20-23 mm
  - Height of conductor holder (h1): 87 mm
  - Material of base plate: Plastic
  - Conductor routing: Fixed
  - Block material: Concrete (C35/45)
  - Standard: DIN IEC/TS 62561-8 (VDE V 0185-561-8)

PROPERTY OF DBA S.p.A. NOT USABLE OR REPRODUCIBLE (EVEN IN PART) WITHOUT WRITTEN CONSENT FROM DBA S.p.A.

9. VENDOR LIST

- POD solutions
  - Vertiv
  - Schneider
  - Siemens

- MV Cables:
  - General cavi S.p.a.
  - Prysmian cavi
  - La Triveneta cavi

- Busbars:
  - EAE
  - Legrand (Zucchini – bTicino)
  - Graziadio

- Low voltage switchboards:
  - IMEB
  - ABB
  - SIEMENS
  - Schneider

- Small power:
  - Wieland
  - Bticino
  - Vimar
  - Gewiss
  - Palazzoli

- Structured cabling system:
  - Rittal
  - Schneider
  - Legrand
  - Commscope
  - Panduit
  - Reichle De Massari
  - Conteg

PROPERTY OF DBA S.p.A. NOT USABLE OR REPRODUCIBLE (EVEN IN PART) WITHOUT WRITTEN CONSENT FROM DBA S.p.A.

- LV Power cables / signal cables:
  - General Cavi
  - Prysmian
  - Baldassarri cavi
  - Berica Cavi
  - La triveneta cavi
  - Beta Cavi

- Cable trays / ladders:
  - Legrand (Cablofile)
  - DKC - SATI
  - FEMI CZ
  - Panduit

- Hangers and supports:
  - Hilti
  - Fischer

- Diesel generators:
  - CAT
  - Cummins
  - MTU + Mitsubishi
  - Kholer

- Waterproof transit:
  - Roxtec
  - Hilti

- Lightning Protection System (LPS):
  - Dehn
  - Sati
  - Roncarati

- Protective pvc conduits:
  - Gewiss
  - Legrand

PROPERTY OF DBA S.p.A. NOT USABLE OR REPRODUCIBLE (EVEN IN PART) WITHOUT WRITTEN CONSENT FROM DBA S.p.A.

- BMS system:
  - PcVue (Nexus)
  - Johnson control
  - Schneider electric
  - Siemens

- Ordinary lighting system:
  - RIDI
  - Disano
  - Philips
  - 3Filippi
  - Trilux

- Emergency lighting system:
  - Linergy
  - Beghelli
  - Schneider
  - Eaton

- Smoke detection system:
  - Notifier
  - Det Fire
  - Siemens
  - Johnson control

PROPERTY OF DBA S.p.A. NOT USABLE OR REPRODUCIBLE (EVEN IN PART) WITHOUT WRITTEN CONSENT FROM DBA S.p.A.

STACK INFRASTRUCTURES

Via Lombardia 1, Siziano, Milan, Italy

MIL07

Schedule - MV & LV Cables

MIL07-DBA-XX-XX-SH-E-60001

07/11/2025

Status: S4 (Suitable for Stage Approval)

Project Number 13038001

File Name: MIL07-DBA-XX-XX-SH-E-60001 - Schedule - MV & LV Cables.docx

PROPERTY OF DBA S.p.A. NOT USABLE OR REPRODUCIBLE (EVEN IN PART) WITHOUT WRITTEN CONSENT FROM DBA S.p.A.

Branch Office
DBA
Via Natale Battaglia, 10
20127, Milano
Italiy
+39 02 5829821
dbaprogetti@pec.dbagroup.it
www.dbagroup.it

Head Office
DBA S.p.A.
Piazza Roma, 19
32045, Santo Stefano di Cadore (BL)
Italiy
+39 0422 693511
dbaprogetti@pec.dbagroup.it
www.dbagroup.it

Project:	MIL 07
Site Adress:	Via Lombardia 1, Siziano, Milan, Italy
Document Title:	Schedule - MV & LV Cables
Document Code:	MIL07-DBA-XX-XX-SH-E-60001
File Name:	MIL07-DBA-XX-XX-SH-E-60001 - Schedule - MV & LV Cables.docx
Revision Date:	07/11/2025
Revision descritption:	S4 – Riba 3 Submittal
Purpose of Issue:	13038001
Author:	Sacha Busetti
Edited by:	Fabio De Rosa
Checked by:	Stefano Soncini
Approved by:	Sacha Busetti

Revision History:

REV.	RED.	CONTR.	APP.	DATA	DESCRIZIONE
P01	FDR	SSO	SBU	07/11/2025	S4 – Riba 3 Submittal

DBA. S.p.A. All rights and related copyright are reserved and owned by DBA. S.p.A. This document is the property of DBA. S.p.A. and may not be duplicated or published without written permission in whole or in part or be used for other purposes other than those indicate.

PROPERTY OF DBA S.p.A. NOT USABLE OR REPRODUCIBLE (EVEN IN PART) WITHOUT WRITTEN CONSENT FROM DBA S.p.A.

1. Attachments

Appendix 1 – MV & LV cables and busduct schedule critical systems 1A, 1B and 1C

Appendix 2 – MV & LV cables and busduct schedule critical systems 1R

Appendix 2 – MV & LV cables and busduct schedule housing system 1H

PROPERTY OF DBA S.p.A. NOT USABLE OR REPRODUCIBLE (EVEN IN PART) WITHOUT WRITTEN CONSENT FROM DBA S.p.A.

Cables management

Unit	Formation / Designation / Lay table	Material / Isolating / Type of lay	Lc [m] / Prox.	Iz [A] / k derat.	T (Ib) [°C] / T (In) [°C]	Tamb [°C] / K²S² L [A²s]	VDTot (Ib) [%] / VDTot (In) [%]	Cable laying
SUBSTATION QMT								
PCM-X.D0	3x(1x150)	COPPER	2800	327,3	48,7	30	1,37	
	RG26H1M16 12/20 kV Cca-s1b,d1,a1	HEPR	1	0,55	53,2	$4,601*10^{8}$	1,53	
	CEI 11-17 (MT)	G.1 - Cavi unipolari su supporti discontinui: staffe (trifoglio)						
POD PCM								
PCM-X.D0	3x(1x150)	COPPER	5	327,3	48,7	30	1,37	
	RG26H1M16 12/20 kV Cca-s1b,d1,a1	HEPR	1	0,55	53,2	$4,601*10^{8}$	1,53	
	CEI 11-17 (MT)	F - Unip. cables on footbridge						
POD PLI-X								
PLI-X.Q4	3x(2x185)+1G185	COPPER	150	639,6	68,6	30	2,83	
	FG16M16 0.6/1 kV Cca-s1b,d1,a1	HEPR	4	0,6	77,7	$2,799*10^{9}$	3,14	
	CEI-UNEL 35024/1	13 - insul. single-core cables, armed or not armed on punched dridges						
PLI-X.Q5	3x(2x185)+1G185	COPPER	150	639,6	68,6	30	2,83	
	FG16M16 0.6/1 kV Cca-s1b,d1,a1	HEPR	4	0,6	77,7	$2,799*10^{9}$	3,14	
	CEI-UNEL 35024/1	13 - insul. single-core cables, armed or not armed on punched dridges						
PLI-X.Q6	3x(2x185)+1x185+1G25	COPPER	15	692,9	46,6	30	0,324	
	FG16M16 0.6/1 kV Cca-s1b,d1,a1	HEPR	3	0,65	79,6	$2,799*10^{9}$	0,47	
	CEI-UNEL 35024/1	13 - insul. single-core cables, armed or not armed on punched dridges						
PLI-X.Q7	3x(2x185)+1x185+1G25	COPPER	15	692,9	30	30	0,147	
	FG16M16 0.6/1 kV Cca-s1b,d1,a1	HEPR	3	0,65	79,6	$2,799*10^{9}$	0,493	
	CEI-UNEL 35024/1	13 - insul. single-core cables, armed or not armed on punched dridges						
PLI-X.Q8	4x(1x35)+1G35	COPPER	25	123,2	32,3	30	0,323	
	FG16M16 0.6/1 kV Cca-s1b,d1,a1	HEPR	3	0,7	36,3	$2,505*10^{7}$	0,457	
	CEI-UNEL 35024/1	13 - insul. single-core cables, armed or not armed on punched dridges						

Cables management

Unit	Formation	Material	Lc [m]	Iz [A]	T (Ib) [°C]	Tamb [°C]	VDTot (Ib) [%]	Cable laying
	Designation	Isolating	Prox.	k derat.	T (In) [°C]	K²S² L [A²s]	VDTot (In) [%]	
	Lay table	Type of lay						
PLI-X.Q9	4x(1x35)+1G35	COPPER	15	123,2	31	30	0,217	
	FG16M16 0.6/1 kV Cca-s1b,d1,a1	HEPR	3	0,7	36,3	$2,505*10^{7}$	0,34	
	CEI-UNEL 35024/1	13 - insul. single-core cables, armed or not armed on punched dridges						
PLI-X.Q11	4x(1x35)+1G35	COPPER	100	176	34,5	30	1,56	
	FG16M16 0.6/1 kV Cca-s1b,d1,a1	HEPR	1	1	37,7	$2,505*10^{7}$	2,01	
	CEI-UNEL 35024/1	13 - insul. single-core cables, armed or not armed on punched dridges						
POD PCU-X-3								
PCU-X-3	3x(2x150)+1x150+1G150	COPPER	15	649,6	51,5	30	0,238	
	FG16M16 0.6/1 kV Cca-s1b,d1,a1	HEPR	2	0,7	69	$1,84*10^{9}$	0,321	
	CEI-UNEL 35024/1	13 - insul. single-core cables, armed or not armed on punched dridges						
POD MSS-X								
MSS-X-1.Q7	4x(1x35)+1G35	COPPER	10	100,3	36,9	30	0,341	
	FG16M16 0.6/1 kV Cca-s1b,d1,a1	HEPR	6	0,57	39,5	$2,505*10^{7}$	0,442	
	CEI-UNEL 35024/1	13 - insul. single-core cables, armed or not armed on punched dridges						
MSS-X-1.Q8	4x(1x35)+1G35	COPPER	20	105,6	30,5	30	0,294	
	FG16M16 0.6/1 kV Cca-s1b,d1,a1	HEPR	5	0,6	31,7	$2,505*10^{7}$	0,426	
	CEI-UNEL 35024/1	13 - insul. single-core cables, armed or not armed on punched dridges						
MSS-X-1.Q9	3x(1x35)+1G16	COPPER	150	105,6	32,2	30	1,12	
	FG16M16 0.6/1 kV Cca-s1b,d1,a1	HEPR	5	0,6	38,6	$2,505*10^{7}$	2,08	
	CEI-UNEL 35024/1	13 - insul. single-core cables, armed or not armed on punched dridges						
MSS-X-1.Q10	3x(1x35)+1G16	COPPER	150	105,6	32,2	30	1,12	
	FG16M16 0.6/1 kV Cca-s1b,d1,a1	HEPR	5	0,6	38,6	$2,505*10^{7}$	2,08	
	CEI-UNEL 35024/1	13 - insul. single-core cables, armed or not armed on punched dridges						
Tap off box	5G16	COPPER	10	80	64,8	30	0,812	
	FG16OM16 0.6/1 kV Cca-s1b,d1,a1	HEPR	2	0,8	67,2	$5,235*10^{6}$	0,914	
	CEI-UNEL 35024/1	13 - multi-core cables armed or not armed on punched dridges						

Cables management

Unit	Formation / Designation / Lay table	Material / Isolating / Type of lay	Lc [m] / Prox.	Iz [A] / k derat.	T (Ib) [°C] / T (In) [°C]	Tamb [°C] / K²S² L [A²s]	VDTot (Ib) [%] / VDTot (In) [%]	Cable laying
POD MDB-X								
MDB-X.Q1	4G6	COPPER	20	28,1	33,1	30	0,55	
	FG16OM16 0.6/1 kV Cca-s1b,d1,a1	HEPR	8	0,52	77,6	$7,362*10^5$	1,27	
	CEI-UNEL 35024/1	13 - multi-core cables armed or not armed on punched dridges						
MDB-X.Q2	4G6	COPPER	20	28,1	33,1	30	0,55	
	FG16OM16 0.6/1 kV Cca-s1b,d1,a1	HEPR	8	0,52	77,6	$7,362*10^5$	1,27	
	CEI-UNEL 35024/1	13 - multi-core cables armed or not armed on punched dridges						
MDB-X.Q3	4G4	COPPER	20	21,8	30,2	30	0,397	
	FG16OM16 0.6/1 kV Cca-s1b,d1,a1	HEPR	8	0,52	42,6	$3,272*10^5$	0,938	
	CEI-UNEL 35024/1	13 - multi-core cables armed or not armed on punched dridges						
MDB-X.Q4	4G4	COPPER	20	21,8	30,2	30	0,397	
	FG16OM16 0.6/1 kV Cca-s1b,d1,a1	HEPR	8	0,52	42,6	$3,272*10^5$	0,938	
	CEI-UNEL 35024/1	13 - multi-core cables armed or not armed on punched dridges						
MDB-X.Q5	4G6	COPPER	60	28,1	33,1	30	0,975	
	FG16OM16 0.6/1 kV Cca-s1b,d1,a1	HEPR	8	0,52	77,6	$7,362*10^5$	2,93	
	CEI-UNEL 35024/1	13 - multi-core cables armed or not armed on punched dridges						
MDB-X.Q6	4G6	COPPER	60	28,1	33,1	30	0,975	
	FG16OM16 0.6/1 kV Cca-s1b,d1,a1	HEPR	8	0,52	77,6	$7,362*10^5$	2,93	
	CEI-UNEL 35024/1	13 - multi-core cables armed or not armed on punched dridges						
MDB-X.Q7	4G4	COPPER	60	21,8	30,2	30	0,516	
	FG16OM16 0.6/1 kV Cca-s1b,d1,a1	HEPR	8	0,52	42,6	$3,272*10^5$	1,93	
	CEI-UNEL 35024/1	13 - multi-core cables armed or not armed on punched dridges						
MDB-X.Q8	4G4	COPPER	60	21,8	30,2	30	0,516	
	FG16OM16 0.6/1 kV Cca-s1b,d1,a1	HEPR	8	0,52	42,6	$3,272*10^5$	1,93	
	CEI-UNEL 35024/1	13 - multi-core cables armed or not armed on punched dridges						

Cables management

Unit	Formation	Material	Lc [m]	Iz [A]	T (Ib) [°C]	Tamb [°C]	VDTot (Ib) [%]	Cable laying
	Designation	Isolating	Prox.	k derat.	T (In) [°C]	K²S² L [A²s]	VDTot (In) [%]	
	Lay table	Type of lay						
MDB-X.Q9	4G4	COPPER	60	21,8	30,2	30	0	
	FG16OM16 0.6/1 kV Cca-s1b,d1,a1	HEPR	8	0,52	42,6	$3,272*10^{5}$	0	
	CEI-UNEL 35024/1	13 - multi-core cables armed or not armed on punched dridges						
MDB-X.Q10	4G4	COPPER	60	21,8	30,2	30	0	
	FG16OM16 0.6/1 kV Cca-s1b,d1,a1	HEPR	8	0,52	42,6	$3,272*10^{5}$	0	
	CEI-UNEL 35024/1	13 - multi-core cables armed or not armed on punched dridges						
MDB-X.Q11	3G4	COPPER	20	25,5	31,2	30	0,724	
	FG16OM16 0.6/1 kV Cca-s1b,d1,a1	HEPR	8	0,52	39,2	$3,272*10^{5}$	1,43	
	CEI-UNEL 35024/1	13 - multi-core cables armed or not armed on punched dridges						
MDB-X.Q12	3G4	COPPER	20	25,5	31,2	30	0,722	
	FG16OM16 0.6/1 kV Cca-s1b,d1,a1	HEPR	8	0,52	39,2	$3,272*10^{5}$	1,43	
	CEI-UNEL 35024/1	13 - multi-core cables armed or not armed on punched dridges						
MDB-X.Q13	3G4	COPPER	20	25,5	30,1	30	0,473	
	FG16OM16 0.6/1 kV Cca-s1b,d1,a1	HEPR	8	0,52	39,2	$3,272*10^{5}$	1,43	
	CEI-UNEL 35024/1	13 - multi-core cables armed or not armed on punched dridges						
MDB-X.Q14	3G4	COPPER	20	25,5	30,1	30	0,473	
	FG16OM16 0.6/1 kV Cca-s1b,d1,a1	HEPR	8	0,52	39,2	$3,272*10^{5}$	1,43	
	CEI-UNEL 35024/1	13 - multi-core cables armed or not armed on punched dridges						
DTM Rack isle 3-4								
Tap off	4x(2x120)+1G25	COPPER	1,5	640	51,1	30	1,37	
	FG16M16 0.6/1 kV Cca-s1b,d1,a1	HEPR	1	0,8	52	$1,178*10^{9}$	1,42	
	CEI-UNEL 35024/1	13 - insul. single-core cables, armed or not armed on punched dridges						
DTM Rack isle 1-2								
Tap off	4x(2x120)+1G25	COPPER	1,5	640	51,1	30	1,56	
	FG16M16 0.6/1 kV Cca-s1b,d1,a1	HEPR	1	0,8	52	$1,178*10^{9}$	1,61	
	CEI-UNEL 35024/1	13 - insul. single-core cables, armed or not armed on punched dridges						

Metal-enclosed bus ducts

Unit	Manufacturer	Mark	Formation	Material	Sect. F [mm²]	Lc [m]	In [A]	Icw [kA]	K²S² [A²s]	VDTot (Ib) [%]
YARD PCG-X										
PCG-X.G0	EAE	50	3L+PEN	ALUMINIUM		20	5000	120	$1,44*10^{10}$	0
POD PLI-X										
PLI-X.Q13	EAE	20	3L+N+PE	ALUMINIUM		10	2000	80	$6,4*10^{9}$	0,337
PLI-X.Q14	EAE	20	3L+N+PE	ALUMINIUM		10	2000	80	$6,4*10^{9}$	0,337
PLI-X.Q23	EAE	32	3L+N+PE	ALUMINIUM		5	3200	100	$1*10^{10}$	0,192
PLI-X.Q16	EAE	20	3L+N+PE	ALUMINIUM		10	2000	80	$6,4*10^{9}$	0,384
PLI-X.Q17	EAE	20	3L+N+PE	ALUMINIUM		60	2000	80	$6,4*10^{9}$	1,34
POD STS-SWB-X										
STS-SWB-Q2	EAE	20	3L+N+PE	ALUMINIUM		10	2000	80	$6,4*10^{9}$	0,384
STS-SWB-Q3	EAE	20	3L+N+PE	ALUMINIUM		50	2000	80	$6,4*10^{9}$	0
POD PTX-X										
PTX-X.D0	EAE	50	3L+PEN	ALUMINIUM		7	5000	120	$1,44*10^{10}$	0,147
POD MSS-X										
MSS-X-1.Q11	EAE	04	3L+N+PE	ALUMINIUM		110	400	40	$1,6*10^{9}$	0,438
POD PCU-X-1										
PCU-X-1	EAE	20	3L+N+PE	ALUMINIUM		10	2000	80	$6,4*10^{9}$	0,192
POD PCU-X-2										
PCU-X-2	EAE	20	3L+N+PE	ALUMINIUM		10	2000	80	$6,4*10^{9}$	0,192
POD STS-1-X										
STS-1-X.BB1	EAE	20	3L+N+PE	ALUMINIUM		60	2000	80	$6,4*10^{9}$	1,54

Cables management

Unit	Formation / Designation / Lay table	Material / Isolating / Type of lay	Lc [m] / Prox.	Iz [A] / k derat.	T (Ib) [°C] / T (In) [°C]	Tamb [°C] / K²S² L [A²s]	VDTot (Ib) [%] / VDTot (In) [%]	Cable laying
POD RCM								
PCM-R.D0	3x(1x150)	COPPER	5	327,3	47,7	30	1,34	
	RG26H1M16 12/20 kV Cca-s1b,d1,a1	HEPR	1	0,55	53,2	$4,601*10^{8}$	1,53	
	CEI 11-17 (MT)	F - Unip. cables on footbridge						
POD RLI-R								
RLI-R.Q4 | CHL-7	3x(2x185)+1G185	COPPER	150	692,9	62,9	30	2,82	
	FG16M16 0.6/1 kV Cca-s1b,d1,a1	HEPR	3	0,65	70,6	$2,799*10^{9}$	3,14	
	CEI-UNEL 35024/1	13 - insul. single-core cables, armed or not armed on punched dridges						
RLI-R.Q5 | CHL-8	3x(2x185)+1G185	COPPER	150	692,9	62,9	30	2,82	
	FG16M16 0.6/1 kV Cca-s1b,d1,a1	HEPR	3	0,65	70,6	$2,799*10^{9}$	3,14	
	CEI-UNEL 35024/1	13 - insul. single-core cables, armed or not armed on punched dridges						
RLI-R.Q6 | RCU-R-3	3x(2x185)+1x185+1G25	COPPER	15	692,9	41,1	30	0,288	
	FG16M16 0.6/1 kV Cca-s1b,d1,a1	HEPR	3	0,65	79,6	$2,799*10^{9}$	0,47	
	CEI-UNEL 35024/1	13 - insul. single-core cables, armed or not armed on punched dridges						
RLI-R.Q7 | UPS RCU-R-3 bypass	3x(2x185)+1x185+1G25	COPPER	15	692,9	30	30	0,143	
	FG16M16 0.6/1 kV Cca-s1b,d1,a1	HEPR	3	0,65	79,6	$2,799*10^{9}$	0,493	
	CEI-UNEL 35024/1	13 - insul. single-core cables, armed or not armed on punched dridges						
RLI-R.Q8 | GDB-GEN-R	4x(1x35)+1G35	COPPER	25	123,2	32,3	30	0,319	
	FG16M16 0.6/1 kV Cca-s1b,d1,a1	HEPR	3	0,7	36,3	$2,505*10^{7}$	0,457	
	CEI-UNEL 35024/1	13 - insul. single-core cables, armed or not armed on punched dridges						
RLI-R.Q9 | GDB-POD-R	4x(1x35)+1G35	COPPER	15	123,2	31	30	0,213	
	FG16M16 0.6/1 kV Cca-s1b,d1,a1	HEPR	3	0,7	36,3	$2,505*10^{7}$	0,34	
	CEI-UNEL 35024/1	13 - insul. single-core cables, armed or not armed on punched dridges						
RLI-R.Q10 | AHU-1	3x(1x50)+1x25+1G25	COPPER	80	151,2	54,3	30	0	
	FG16M16 0.6/1 kV Cca-s1b,d1,a1	HEPR	3	0,7	97,2	$5,112*10^{7}$	0	
	CEI-UNEL 35024/1	13 - insul. single-core cables, armed or not armed on punched dridges						

Cables management

Unit	Formation / Designation / Lay table	Material / Isolating / Type of lay	Lc [m] / Prox.	Iz [A] / k derat.	T (Ib) [°C] / T (In) [°C]	Tamb [°C] / K²S² L [A²s]	VDTot (Ib) [%] / VDTot (In) [%]	Cable laying
POD RCU-R-3								
RCU-R-3 | To MSS-R	3x(2x150)+1x150+1G150	COPPER	15	649,6	43,8	30	0,193	
	FG16M16 0.6/1 kV Cca-s1b,d1,a1	HEPR	2	0,7	69	$1,84*10^{9}$	0,322	
	CEI-UNEL 35024/1	13 - insul. single-core cables, armed or not armed on punched dridges						
POD MSS-R								
MSS-R.Q7 | MDB-R	4x(1x35)+1G35	COPPER	10	88	33,9	30	0,266	
	FG16M16 0.6/1 kV Cca-s1b,d1,a1	HEPR	10	0,5	49,4	$2,505*10^{7}$	0,484	
	CEI-UNEL 35024/1	13 - insul. single-core cables, armed or not armed on punched dridges						
MSS-R.Q8 | CDB-POD-R	4x(1x35)+1G35	COPPER	20	88	30,7	30	0,249	
	FG16M16 0.6/1 kV Cca-s1b,d1,a1	HEPR	10	0,5	32,5	$2,505*10^{7}$	0,428	
	CEI-UNEL 35024/1	13 - insul. single-core cables, armed or not armed on punched dridges						
MSS-R.Q9 | PPU-7	3x(1x35)+1G16	COPPER	150	88	31,8	30	0,86	
	FG16M16 0.6/1 kV Cca-s1b,d1,a1	HEPR	10	0,5	42,4	$2,505*10^{7}$	2,08	
	CEI-UNEL 35024/1	13 - insul. single-core cables, armed or not armed on punched dridges						
MSS-R.Q10 | PPU-8	3x(1x35)+1G16	COPPER	150	88	31,8	30	0,86	
	FG16M16 0.6/1 kV Cca-s1b,d1,a1	HEPR	10	0,5	42,4	$2,505*10^{7}$	2,08	
	CEI-UNEL 35024/1	13 - insul. single-core cables, armed or not armed on punched dridges						
MSS-R.Q12 | CDB-MMR01-R	4x(1x35)+1G16	COPPER	70	88	58,6	30	1,49	
	FG16M16 0.6/1 kV Cca-s1b,d1,a1	HEPR	10	0,5	79,6	$2,505*10^{7}$	2,03	
	CEI-UNEL 35024/1	13 - insul. single-core cables, armed or not armed on punched dridges						
MSS-R.Q13 | CDB-MMR02-R	4x(1x35)+1G16	COPPER	100	88	58,6	30	2,04	
	FG16M16 0.6/1 kV Cca-s1b,d1,a1	HEPR	10	0,5	79,6	$2,505*10^{7}$	2,76	
	CEI-UNEL 35024/1	13 - insul. single-core cables, armed or not armed on punched dridges						
MSS-R.Q14 | CDB-R-1	4x(1x35)+1G16	COPPER	70	88	38	30	0,852	
	FG16M16 0.6/1 kV Cca-s1b,d1,a1	HEPR	10	0,5	79,6	$2,505*10^{7}$	1,97	
	CEI-UNEL 35024/1	13 - insul. single-core cables, armed or not armed on punched dridges						

Cables management

Unit	Formation	Material	Lc [m]	Iz [A]	T (Ib) [°C]	Tamb [°C]	VDTot (Ib) [%]	Cable laying
	Designation	Isolating	Prox.	k derat.	T (In) [°C]	K^2S^2 L [A^2s]	VDTot (In) [%]	
	Lay table	Type of lay						
MSS-R.Q15 | CDB-R-2	4x(1x35)+1G16	COPPER	70	88	38	30	0,852	
	FG16M16 0.6/1 kV Cca-s1b,d1,a1	HEPR	10	0,5	79,6	$2,505*10^{7}$	1,97	
	CEI-UNEL 35024/1	13 - insul. single-core cables, armed or not armed on punched dridges						
MSS-R.Q16 | CDB-R-11	4x(1x35)+1G16	COPPER	100	88	38	30	1,13	
	FG16M16 0.6/1 kV Cca-s1b,d1,a1	HEPR	10	0,5	79,6	$2,505*10^{7}$	2,67	
	CEI-UNEL 35024/1	13 - insul. single-core cables, armed or not armed on punched dridges						
MSS-R.Q17 | CDB-R-12	4x(1x35)+1G16	COPPER	70	88	38	30	0,852	
	FG16M16 0.6/1 kV Cca-s1b,d1,a1	HEPR	10	0,5	79,6	$2,505*10^{7}$	1,97	
	CEI-UNEL 35024/1	13 - insul. single-core cables, armed or not armed on punched dridges						
Tap off box | Fan wall	5G16	COPPER	10	80	64,8	30	0,767	
	FG16OM16 0.6/1 kV Cca-s1b,d1,a1	HEPR	2	0,8	67,2	$5,235*10^{6}$	0,916	
	CEI-UNEL 35024/1	13 - multi-core cables armed or not armed on punched dridges						
POD MDB-R								
MDB-R.Q1 | CRAH-POD-R-1	4G6	COPPER	20	27	33,4	30	0,464	
	FG16OM16 0.6/1 kV Cca-s1b,d1,a1	HEPR	10	0,5	81,4	$7,362*10^{5}$	1,31	
	CEI-UNEL 35024/1	13 - multi-core cables armed or not armed on punched dridges						
MDB-R.Q2 | CRAH-POD-R-2	4G6	COPPER	20	27	33,4	30	0,464	
	FG16OM16 0.6/1 kV Cca-s1b,d1,a1	HEPR	10	0,5	81,4	$7,362*10^{5}$	1,31	
	CEI-UNEL 35024/1	13 - multi-core cables armed or not armed on punched dridges						
MDB-R.Q3 | CRAH-POD-R-3	4G4	COPPER	20	21	30,2	30	0,311	
	FG16OM16 0.6/1 kV Cca-s1b,d1,a1	HEPR	10	0,5	43,6	$3,272*10^{5}$	0,98	
	CEI-UNEL 35024/1	13 - multi-core cables armed or not armed on punched dridges						
MDB-R.Q4 | CRAH-POD-R-4	4G4	COPPER	20	21	30,2	30	0,311	
	FG16OM16 0.6/1 kV Cca-s1b,d1,a1	HEPR	10	0,5	43,6	$3,272*10^{5}$	0,98	
	CEI-UNEL 35024/1	13 - multi-core cables armed or not armed on punched dridges						

Cables management

Unit	Formation	Material	Lc [m]	Iz [A]	T (Ib) [°C]	Tamb [°C]	VDTot (Ib) [%]	Cable laying
	Designation	Isolating	Prox.	k derat.	T (In) [°C]	K²S² L [A²s]	VDTot (In) [%]	
	Lay table	Type of lay						
MDB-R.Q5 | CRAH-POD-2R-1	4G6	COPPER	60	27	33,4	30	0	
	FG16OM16 0.6/1 kV Cca-s1b,d1,a1	HEPR	10	0,5	81,4	$7,362*10^{5}$	0	
	CEI-UNEL 35024/1	13 - multi-core cables armed or not armed on punched dridges						
MDB-R.Q6 | CRAH-POD-2R-2	4G6	COPPER	60	27	33,4	30	0	
	FG16OM16 0.6/1 kV Cca-s1b,d1,a1	HEPR	10	0,5	81,4	$7,362*10^{5}$	0	
	CEI-UNEL 35024/1	13 - multi-core cables armed or not armed on punched dridges						
MDB-R.Q7 | CRAH-POD-2R-3	4G4	COPPER	60	21	30,2	30	0	
	FG16OM16 0.6/1 kV Cca-s1b,d1,a1	HEPR	10	0,5	43,6	$3,272*10^{5}$	0	
	CEI-UNEL 35024/1	13 - multi-core cables armed or not armed on punched dridges						
MDB-R.Q8 | CRAH-POD-2R-4	4G4	COPPER	60	21	30,2	30	0	
	FG16OM16 0.6/1 kV Cca-s1b,d1,a1	HEPR	10	0,5	43,6	$3,272*10^{5}$	0	
	CEI-UNEL 35024/1	13 - multi-core cables armed or not armed on punched dridges						
MDB-R.Q9 | VDP-3	3G10	COPPER	130	43	31,7	30	2,11	
	FG16OM16 0.6/1 kV Cca-s1b,d1,a1	HEPR	10	0,5	33,2	$2,045*10^{6}$	3	
	CEI-UNEL 35024/1	13 - multi-core cables armed or not armed on punched dridges						
MDB-R.Q11 | DXC-01	3G4	COPPER	20	24,5	31,3	30	0,623	
	FG16OM16 0.6/1 kV Cca-s1b,d1,a1	HEPR	10	0,5	40	$3,272*10^{5}$	1,47	
	CEI-UNEL 35024/1	13 - multi-core cables armed or not armed on punched dridges						
MDB-R.Q12 | DXC-02	3G4	COPPER	20	24,5	31,3	30	0,628	
	FG16OM16 0.6/1 kV Cca-s1b,d1,a1	HEPR	10	0,5	40	$3,272*10^{5}$	1,47	
	CEI-UNEL 35024/1	13 - multi-core cables armed or not armed on punched dridges						
MDB-R.Q13 | BEF-01	3G4	COPPER	20	24,5	30,1	30	0,385	
	FG16OM16 0.6/1 kV Cca-s1b,d1,a1	HEPR	10	0,5	40	$3,272*10^{5}$	1,47	
	CEI-UNEL 35024/1	13 - multi-core cables armed or not armed on punched dridges						

Cables management

Unit	Formation	Material	Lc [m]	Iz [A]	T (Ib) [°C]	Tamb [°C]	VDTot (Ib) [%]	Cable laying
	Designation	Isolating	Prox.	k derat.	T (In) [°C]	K^2S^2 L [A^2s]	VDTot (In) [%]	
	Lay table	Type of lay						
MDB-R.Q14 | BEF-02	3G4	COPPER	20	24,5	30,1	30	0,389	
	FG16OM16 0.6/1 kV Cca-s1b,d1,a1	HEPR	10	0,5	40	$3,272*10^5$	1,47	
	CEI-UNEL 35024/1	13 - multi-core cables armed or not armed on punched dridges						

Metal-enclosed bus ducts

Unit	Manufacturer	Mark	Formation	Material	Sect. F [mm²]	Lc [m]	In [A]	Icw [kA]	K²S² [A²s]	VDTot (Ib) [%]
YARD RCG-R										
PCG-R.G0 | To PLI-R.Q2	EAE	50	3L+PEN	ALUMINIUM		20	5000	120	$1,44*10^{10}$	0
POD RLI-R										
RLI-R.Q13 | To RCU-R-1	EAE	20	3L+N+PE	ALUMINIUM		10	2000	80	$6,4*10^{9}$	0,333
RLI-R.Q14 | To RCU-R-2	EAE	20	3L+N+PE	ALUMINIUM		10	2000	80	$6,4*10^{9}$	0,333
RLI-R.Q23 | Camlock esternal connection | for loadbank	EAE	32	3L+N+PE	ALUMINIUM		5	3200	100	$1*10^{10}$	0,192
RLI-R.Q16 | Backup feeder | to other systems	EAE	32	3L+N+PE	ALUMINIUM		100	3200	100	$1*10^{10}$	2,44
POD RTX-R										
RTX-R.D0 | To PLI-R.Q1	EAE	50	3L+PEN	ALUMINIUM		7	5000	120	$1,44*10^{10}$	0,143
POD MSS-R										
MSS-R.Q11 | DH01-FANWALL	EAE	04	3L+N+PE	ALUMINIUM		110	400	40	$1,6*10^{9}$	0,393
POD RCU-R-1										
RCU-R-1 | To RLI-R.Q22	EAE	20	3L+N+PE	ALUMINIUM		10	2000	80	$6,4*10^{9}$	0,192
POD RCU-R-2										
RCU-R-2 | To RLI-R.Q21	EAE	20	3L+N+PE	ALUMINIUM		10	2000	80	$6,4*10^{9}$	0,192

Cables management

Unit	Formation	Material	Lc [m]	Iz [A]	T (Ib) [°C]	Tamb [°C]	VDTot (Ib) [%]	Cable laying
	Designation	Isolating	Prox.	k derat.	T (In) [°C]	K²S² L [A²s]	VDTot (In) [%]	
	Lay table	Type of lay						
POD PCM								
PCM-X.D0	3x(1x150)	COPPER	5	327,3	32,1	30	0,481	
	RG26H1M16 12/20 kV Cca-s1b,d1,a1	HEPR	1	0,55	32,4	$4,601*10^{8}$	0,512	
	CEI 11-17 (MT)	F - Unip. cables on footbridge						
POD LLI-X								
LLI-X.Q4	3x(1x95)+1x50+1G50	COPPER	100	194,9	70,6	30	2,01	
	FG16M16 0.6/1 kV Cca-s1b,d1,a1	HEPR	6	0,57	78,4	$1,846*10^{8}$	2,19	
	CEI-UNEL 35024/1	13 - insul. single-core cables, armed or not armed on punched dridges						
LLI-X.Q6	3x(2x185)+1x185+1G16	COPPER	10	692,9	44	30	0,24	
	FG16M16 0.6/1 kV Cca-s1b,d1,a1	HEPR	3	0,65	79,6	$2,799*10^{9}$	0,345	
	CEI-UNEL 35024/1	13 - insul. single-core cables, armed or not armed on punched dridges						
LLI-X.Q7	3x(3x150)+2x150+1G10	COPPER	15	835,2	30	30	0,132	
	FG16M16 0.6/1 kV Cca-s1b,d1,a1	HEPR	3	0,6	64,1	$4,141*10^{9}$	0,397	
	CEI-UNEL 35024/1	13 - insul. single-core cables, armed or not armed on punched dridges						
LLI-X.Q8	5G16	COPPER	25	70	37,1	30	0,501	
	FG16OM16 0.6/1 kV Cca-s1b,d1,a1	HEPR	3	0,7	49,6	$5,235*10^{6}$	0,755	
	CEI-UNEL 35024/1	13 - multi-core cables armed or not armed on punched dridges						
LLI-X.Q9	5G16	COPPER	15	70	33,1	30	0,28	
	FG16OM16 0.6/1 kV Cca-s1b,d1,a1	HEPR	3	0,7	49,6	$5,235*10^{6}$	0,51	
	CEI-UNEL 35024/1	13 - multi-core cables armed or not armed on punched dridges						
LLI-X.Q10	4x(1x35)+1G16	COPPER	60	123,2	46,3	30	1,26	
	FG16M16 0.6/1 kV Cca-s1b,d1,a1	HEPR	3	0,7	77,8	$2,505*10^{7}$	2,08	
	CEI-UNEL 35024/1	13 - insul. single-core cables, armed or not armed on punched dridges						
LLI-X.Q11	4x(1x35)+1G16	COPPER	60	123,2	46,3	30	1,26	
	FG16M16 0.6/1 kV Cca-s1b,d1,a1	HEPR	3	0,7	77,8	$2,505*10^{7}$	2,08	
	CEI-UNEL 35024/1	13 - insul. single-core cables, armed or not armed on punched dridges						

Cables management

Unit	Formation	Material	Lc [m]	Iz [A]	T (Ib) [°C]	Tamb [°C]	VDTot (Ib) [%]	Cable laying
	Designation	Isolating	Prox.	k derat.	T (In) [°C]	K²S² L [A²s]	VDTot (In) [%]	
	Lay table	Type of lay						
LLI-X.Q12	5G16	COPPER	60	54	21,5	20	0,427	
	FG16OM16 0.6/1 kV Cca-s1b,d1,a1	HEPR	3	0,75	58,4	$5,235*10^{6}$	1,62	
	CEI-UNEL 35026	61 multi-core cables in buried protective pipes						
LLI-X.Q13	5G16	COPPER	60	54	21,5	20	0,427	
	FG16OM16 0.6/1 kV Cca-s1b,d1,a1	HEPR	3	0,75	58,4	$5,235*10^{6}$	1,62	
	CEI-UNEL 35026	61 multi-core cables in buried protective pipes						
LLI-X.Q14	5G16	COPPER	65	70	33,1	30	0,773	
	FG16OM16 0.6/1 kV Cca-s1b,d1,a1	HEPR	3	0,7	49,6	$5,235*10^{6}$	1,74	
	CEI-UNEL 35024/1	13 - multi-core cables armed or not armed on punched dridges						
LLI-X.Q16	3x(1x50)+1x25+1G25	COPPER	90	129,6	63,1	30	1,93	
	FG16M16 0.6/1 kV Cca-s1b,d1,a1	HEPR	5	0,6	73,2	$5,112*10^{7}$	2,19	
	CEI-UNEL 35024/1	13 - insul. single-core cables, armed or not armed on punched dridges						
LLI-X.Q17	3x(1x50)+1x25+1G25	COPPER	80	129,6	63,1	30	1,73	
	FG16M16 0.6/1 kV Cca-s1b,d1,a1	HEPR	5	0,6	73,2	$5,112*10^{7}$	1,96	
	CEI-UNEL 35024/1	13 - insul. single-core cables, armed or not armed on punched dridges						
LLI-X.Q18	3x(1x50)+1x25+1G25	COPPER	210	129,6	44,7	30	2,92	
	FG16M16 0.6/1 kV Cca-s1b,d1,a1	HEPR	5	0,6	52,9	$5,112*10^{7}$	3,62	
	CEI-UNEL 35024/1	13 - insul. single-core cables, armed or not armed on punched dridges						
LLI-X.Q19	3x(1x50)+1x25+1G25	COPPER	75	108	63,1	30	1,38	
	FG16M16 0.6/1 kV Cca-s1b,d1,a1	HEPR	10	0,5	62,9	$5,112*10^{7}$	1,38	
	CEI-UNEL 35024/1	13 - insul. single-core cables, armed or not armed on punched dridges						
LLI-X.Q20	3x(1x50)+1x25+1G25	COPPER	65	108	63,1	30	1,21	
	FG16M16 0.6/1 kV Cca-s1b,d1,a1	HEPR	10	0,5	62,9	$5,112*10^{7}$	1,22	
	CEI-UNEL 35024/1	13 - insul. single-core cables, armed or not armed on punched dridges						

Cables management

Unit	Formation	Material	Lc [m]	Iz [A]	T (Ib) [°C]	Tamb [°C]	VDTot (Ib) [%]	Cable laying
	Designation	Isolating	Prox.	k derat.	T (In) [°C]	K^2S^2 L [A^2s]	VDTot (In) [%]	
	Lay table	Type of lay						
LLI-X.Q21	5G16	COPPER	90	50	68,6	30	2,35	
	FG16OM16 0.6/1 kV Cca-s1b,d1,a1	HEPR	10	0,5	90	$5,235*10^{6}$	2,91	
	CEI-UNEL 35024/1	13 - multi-core cables armed or not armed on punched dridges						
LLI-X.Q22	5G16	COPPER	90	50	68,6	30	2,35	
	FG16OM16 0.6/1 kV Cca-s1b,d1,a1	HEPR	10	0,5	90	$5,235*10^{6}$	2,91	
	CEI-UNEL 35024/1	13 - multi-core cables armed or not armed on punched dridges						
LLI-X.Q23	5G16	COPPER	100	50	85,6	30	3,1	
	FG16OM16 0.6/1 kV Cca-s1b,d1,a1	HEPR	10	0,5	90	$5,235*10^{6}$	3,22	
	CEI-UNEL 35024/1	13 - multi-core cables armed or not armed on punched dridges						
LLI-X.Q24	3x35+1x16+1G16	COPPER	210	79	52,3	30	3,07	
	FG16OM16 0.6/1 kV Cca-s1b,d1,a1	HEPR	10	0,5	54	$2,505*10^{7}$	3,19	
	CEI-UNEL 35024/1	13 - multi-core cables armed or not armed on punched dridges						
LLI-X.Q25	5G16	COPPER	100	50	54,7	30	2,11	
	FG16OM16 0.6/1 kV Cca-s1b,d1,a1	HEPR	10	0,5	90	$5,235*10^{6}$	3,22	
	CEI-UNEL 35024/1	13 - multi-core cables armed or not armed on punched dridges						
LLI-X.Q26	5G16	COPPER	100	50	54,7	30	2,11	
	FG16OM16 0.6/1 kV Cca-s1b,d1,a1	HEPR	10	0,5	90	$5,235*10^{6}$	3,22	
	CEI-UNEL 35024/1	13 - multi-core cables armed or not armed on punched dridges						
LLI-X.Q27	5G16	COPPER	60	50	31,5	30	0,427	
	FG16OM16 0.6/1 kV Cca-s1b,d1,a1	HEPR	10	0,5	37,8	$5,235*10^{6}$	0,805	
	CEI-UNEL 35024/1	13 - multi-core cables armed or not armed on punched dridges						
LLI-X.Q28	5G16	COPPER	110	50	31,5	30	0,674	
	FG16OM16 0.6/1 kV Cca-s1b,d1,a1	HEPR	10	0,5	37,8	$5,235*10^{6}$	1,36	
	CEI-UNEL 35024/1	13 - multi-core cables armed or not armed on punched dridges						

Cables management

Unit	Formation	Material	Lc [m]	Iz [A]	T (Ib) [°C]	Tamb [°C]	VDTot (Ib) [%]	Cable laying
	Designation	Isolating	Prox.	k derat.	T (In) [°C]	K²S² L [A²s]	VDTot (In) [%]	
	Lay table	Type of lay						
LLI-X.Q29	5G16	COPPER	150	50	31,5	30	0,871	
	FG16OM16 0.6/1 kV Cca-s1b,d1,a1	HEPR	10	0,5	37,8	$5,235*10^{6}$	1,8	
	CEI-UNEL 35024/1	13 - multi-core cables armed or not armed on punched dridges						
LLI-X.Q30	5G16	COPPER	200	50	31,5	30	1,12	
	FG16OM16 0.6/1 kV Cca-s1b,d1,a1	HEPR	10	0,5	37,8	$5,235*10^{6}$	2,36	
	CEI-UNEL 35024/1	13 - multi-core cables armed or not armed on punched dridges						
LLI-X.Q31	5G16	COPPER	65	50	36,2	30	0,773	
	FG16OM16 0.6/1 kV Cca-s1b,d1,a1	HEPR	10	0,5	37,8	$5,235*10^{6}$	0,86	
	CEI-UNEL 35024/1	13 - multi-core cables armed or not armed on punched dridges						
LLI-X.Q32	5G16	COPPER	220	50	36,2	30	2,3	
	FG16OM16 0.6/1 kV Cca-s1b,d1,a1	HEPR	10	0,5	37,8	$5,235*10^{6}$	2,58	
	CEI-UNEL 35024/1	13 - multi-core cables armed or not armed on punched dridges						
LLI-X.Q33	5G16	COPPER	50	50	43,9	30	0,871	
	FG16OM16 0.6/1 kV Cca-s1b,d1,a1	HEPR	10	0,5	48,8	$5,235*10^{6}$	1	
	CEI-UNEL 35024/1	13 - multi-core cables armed or not armed on punched dridges						
LLI-X.Q34	5G16	COPPER	50	50	43,9	30	0,871	
	FG16OM16 0.6/1 kV Cca-s1b,d1,a1	HEPR	10	0,5	48,8	$5,235*10^{6}$	1	
	CEI-UNEL 35024/1	13 - multi-core cables armed or not armed on punched dridges						
LLI-X.Q35	5G16	COPPER	60	50	32,2	30	0,487	
	FG16OM16 0.6/1 kV Cca-s1b,d1,a1	HEPR	10	0,5	37,8	$5,235*10^{6}$	0,805	
	CEI-UNEL 35024/1	13 - multi-core cables armed or not armed on punched dridges						
LLI-X.Q36	5G16	COPPER	180	50	30,1	30	0,398	
	FG16OM16 0.6/1 kV Cca-s1b,d1,a1	HEPR	10	0,5	37,8	$5,235*10^{6}$	2,13	
	CEI-UNEL 35024/1	13 - multi-core cables armed or not armed on punched dridges						

Cables management

Unit	Formation	Material	Lc [m]	Iz [A]	T (Ib) [°C]	Tamb [°C]	VDTot (Ib) [%]	Cable laying
	Designation	Isolating	Prox.	k derat.	T (In) [°C]	K²S² L [A²s]	VDTot (In) [%]	
	Lay table	Type of lay						
LLI-X.Q38	5G16	COPPER	60	50	36,2	30	0,723	
	FG16OM16 0.6/1 kV Cca-s1b,d1,a1	HEPR	10	0,5	37,8	$5,235*10^{6}$	0,805	
	CEI-UNEL 35024/1	13 - multi-core cables armed or not armed on punched dridges						
LLI-X.Q39	5G16	COPPER	60	50	36,2	30	0,723	
	FG16OM16 0.6/1 kV Cca-s1b,d1,a1	HEPR	10	0,5	37,8	$5,235*10^{6}$	0,805	
	CEI-UNEL 35024/1	13 - multi-core cables armed or not armed on punched dridges						
LLI-X.Q40	3x(1x185)+1x95	COPPER	60	242,3	20	20	0,132	
	FG16M16 0.6/1 kV Cca-s1b,d1,a1	HEPR	3	0,75	80,4	$6,999*10^{8}$	1,08	
	CEI-UNEL 35026	61 single-core cables w/sheath in buried protective pipes						
LLI-X.Q41	3x(1x185)+1x95	COPPER	100	426,4	30	30	0,132	
	FG16M16 0.6/1 kV Cca-s1b,d1,a1	HEPR	2	0,8	82,8	$6,999*10^{8}$	2,93	
	CEI-UNEL 35024/1	13 - insul. single-core cables, armed or not armed on punched dridges						
POD LLU-1H								
LLU-1H	3x(2x150)+1x150+1G150	COPPER	15	649,6	48,3	30	0,224	
	FG16M16 0.6/1 kV Cca-s1b,d1,a1	HEPR	2	0,7	69	$1,84*10^{9}$	0,324	
	CEI-UNEL 35024/1	13 - insul. single-core cables, armed or not armed on punched dridges						
POD LSS-1H								
LSS-1H.Q5	3x(1x95)+1x50+1G50	COPPER	65	177,8	78,8	30	0	
	FG16M16 0.6/1 kV Cca-s1b,d1,a1	HEPR	8	0,52	78,6	$1,846*10^{8}$	0	
	CEI-UNEL 35024/1	13 - insul. single-core cables, armed or not armed on punched dridges						
LSS-1H.Q7	5G16	COPPER	10	50	64,5	30	0,491	
	FG16OM16 0.6/1 kV Cca-s1b,d1,a1	HEPR	10	0,5	68,4	$5,235*10^{6}$	0,604	
	CEI-UNEL 35024/1	13 - multi-core cables armed or not armed on punched dridges						
LSS-1H.Q8	5G16	COPPER	15	50	36,2	30	0,372	
	FG16OM16 0.6/1 kV Cca-s1b,d1,a1	HEPR	10	0,5	68,4	$5,235*10^{6}$	0,693	
	CEI-UNEL 35024/1	13 - multi-core cables armed or not armed on punched dridges						

Cables management

Unit	Formation	Material	Lc [m]	Iz [A]	T (Ib) [°C]	Tamb [°C]	VDTot (Ib) [%]	Cable laying
	Designation	Isolating	Prox.	k derat.	T (In) [°C]	K²S² L [A²s]	VDTot (In) [%]	
	Lay table	Type of lay						
LSS-1H.Q9	4G16	COPPER	110	50	36,2	30	1,3	
	FG16OM16 0.6/1 kV Cca-s1b,d1,a1	HEPR	10	0,5	68,4	$5,235*10^{6}$	3,03	
	CEI-UNEL 35024/1	13 - multi-core cables armed or not armed on punched dridges						
LSS-1H.Q10	4x(1x35)+1G16	COPPER	60	84,5	64,6	30	1,35	
	FG16M16 0.6/1 kV Cca-s1b,d1,a1	HEPR	10	0,5	71,2	$2,505*10^{7}$	1,56	
	CEI-UNEL 35024/1	13 - multi-core cables armed or not armed on punched dridges						
LSS-1H.Q11	4x(1x35)+1G16	COPPER	130	84,5	64,6	30	2,68	
	FG16H2M16 0,6/1 kV Cca-s1b,d1,a1	HEPR	10	0,5	71,2	$2,505*10^{7}$	3	
	CEI-UNEL 35024/1	13 - multi-core cables armed or not armed on punched dridges						
LSS-1H.Q12	5G16	COPPER	60	50	54,7	30	1,41	
	FG16OM16 0.6/1 kV Cca-s1b,d1,a1	HEPR	10	0,5	68,4	$5,235*10^{6}$	1,8	
	CEI-UNEL 35024/1	13 - multi-core cables armed or not armed on punched dridges						
LSS-1H.Q13	5G16	COPPER	60	50	54,7	30	1,41	
	FG16OM16 0.6/1 kV Cca-s1b,d1,a1	HEPR	10	0,5	68,4	$5,235*10^{6}$	1,8	
	CEI-UNEL 35024/1	13 - multi-core cables armed or not armed on punched dridges						
LSS-1H.Q14	5G16	COPPER	65	50	54,7	30	1,51	
	FG16OM16 0.6/1 kV Cca-s1b,d1,a1	HEPR	10	0,5	68,4	$5,235*10^{6}$	1,92	
	CEI-UNEL 35024/1	13 - multi-core cables armed or not armed on punched dridges						
LSS-1H.Q15	5G25	COPPER	220	63,5	45,3	30	3,05	
	FG16OM16 0.6/1 kV Cca-s1b,d1,a1	HEPR	10	0,5	53,8	$1,278*10^{7}$	3,85	
	CEI-UNEL 35024/1	13 - multi-core cables armed or not armed on punched dridges						
LSS-1H.Q16	5G16	COPPER	60	50	54,7	30	1,41	
	FG16OM16 0.6/1 kV Cca-s1b,d1,a1	HEPR	10	0,5	68,4	$5,235*10^{6}$	1,8	
	CEI-UNEL 35024/1	13 - multi-core cables armed or not armed on punched dridges						

Cables management

Unit	Formation	Material	Lc [m]	Iz [A]	T (Ib) [°C]	Tamb [°C]	VDTot (Ib) [%]	Cable laying
	Designation	Isolating	Prox.	k derat.	T (In) [°C]	K²S² L [A²s]	VDTot (In) [%]	
	Lay table	Type of lay						
POD MDB-1H-2								
MDB-1H-2.Q3	4G6	COPPER	20	28,1	30,2	30	0,5	
	FG16OM16 0.6/1 kV Cca-s1b,d1,a1	HEPR	8	0,52	37,6	$7,362*10^5$	0,935	
	CEI-UNEL 35024/1	13 - multi-core cables armed or not armed on punched dridges						
MDB-1H-2.Q4	4G6	COPPER	20	28,1	30,2	30	0,5	
	FG16OM16 0.6/1 kV Cca-s1b,d1,a1	HEPR	8	0,52	37,6	$7,362*10^5$	0,935	
	CEI-UNEL 35024/1	13 - multi-core cables armed or not armed on punched dridges						
MDB-1H-2.Q5	4G6	COPPER	60	28,1	33,1	30	1,08	
	FG16OM16 0.6/1 kV Cca-s1b,d1,a1	HEPR	8	0,52	77,6	$7,362*10^5$	3,1	
	CEI-UNEL 35024/1	13 - multi-core cables armed or not armed on punched dridges						
MDB-1H-2.Q6	4G6	COPPER	60	28,1	33,1	30	1,08	
	FG16OM16 0.6/1 kV Cca-s1b,d1,a1	HEPR	8	0,52	77,6	$7,362*10^5$	3,1	
	CEI-UNEL 35024/1	13 - multi-core cables armed or not armed on punched dridges						
MDB-1H-2.Q7	4G4	COPPER	60	21,8	30,4	30	0,694	
	FG16OM16 0.6/1 kV Cca-s1b,d1,a1	HEPR	8	0,52	42,6	$3,272*10^5$	2,09	
	CEI-UNEL 35024/1	13 - multi-core cables armed or not armed on punched dridges						
MDB-1H-2.Q8	4G4	COPPER	60	21,8	30,4	30	0,694	
	FG16OM16 0.6/1 kV Cca-s1b,d1,a1	HEPR	8	0,52	42,6	$3,272*10^5$	2,09	
	CEI-UNEL 35024/1	13 - multi-core cables armed or not armed on punched dridges						
MDB-1H-2.Q9	5G6	COPPER	80	28,1	31,3	30	1,04	
	FG16OM16 0.6/1 kV Cca-s1b,d1,a1	HEPR	8	0,52	37,6	$7,362*10^5$	1,93	
	CEI-UNEL 35024/1	13 - multi-core cables armed or not armed on punched dridges						
MDB-1H-2.Q10	5G6	COPPER	210	28,1	30,9	30	1,66	
	FG16OM16 0.6/1 kV Cca-s1b,d1,a1	HEPR	8	0,52	37,6	$7,362*10^5$	4,1	
	CEI-UNEL 35024/1	13 - multi-core cables armed or not armed on punched dridges						

Cables management

Unit	Formation	Material	Lc [m]	Iz [A]	T (Ib) [°C]	Tamb [°C]	VDTot (Ib) [%]	Cable laying
	Designation	Isolating	Prox.	k derat.	T (In) [°C]	K^2S^2 L [A^2s]	VDTot (In) [%]	
	Lay table	Type of lay						
MDB-1H-2.Q11	3G4	COPPER	20	25,5	31,2	30	0,764	
	FG16OM16 0.6/1 kV Cca-s1b,d1,a1	HEPR	8	0,52	39,2	$3,272*10^5$	1,59	
	CEI-UNEL 35024/1	13 - multi-core cables armed or not armed on punched dridges						
MDB-1H-2.Q12	3G4	COPPER	20	25,5	31,2	30	0,874	
	FG16OM16 0.6/1 kV Cca-s1b,d1,a1	HEPR	8	0,52	39,2	$3,272*10^5$	1,59	
	CEI-UNEL 35024/1	13 - multi-core cables armed or not armed on punched dridges						
MDB-1H-2.Q13	3G4	COPPER	20	25,5	30,1	30	0,571	
	FG16OM16 0.6/1 kV Cca-s1b,d1,a1	HEPR	8	0,52	39,2	$3,272*10^5$	1,59	
	CEI-UNEL 35024/1	13 - multi-core cables armed or not armed on punched dridges						
MDB-1H-2.Q14	3G4	COPPER	20	25,5	30,1	30	0,526	
	FG16OM16 0.6/1 kV Cca-s1b,d1,a1	HEPR	8	0,52	39,2	$3,272*10^5$	1,59	
	CEI-UNEL 35024/1	13 - multi-core cables armed or not armed on punched dridges						
MDB-1H-2.Q15	3G6	COPPER	100	32,8	32,9	30	2,91	
	FG16OM16 0.6/1 kV Cca-s1b,d1,a1	HEPR	8	0,52	35,6	$7,362*10^5$	3,92	
	CEI-UNEL 35024/1	13 - multi-core cables armed or not armed on punched dridges						
MDB-1H-2.Q16	3G6	COPPER	100	32,8	32,9	30	2,85	
	FG16OM16 0.6/1 kV Cca-s1b,d1,a1	HEPR	8	0,52	35,6	$7,362*10^5$	3,92	
	CEI-UNEL 35024/1	13 - multi-core cables armed or not armed on punched dridges						

Metal-enclosed bus ducts

Unit	Manufacturer	Mark	Formation	Material	Sect. F [mm²]	Lc [m]	In [A]	Icw [kA]	K²S² [A²s]	VDTot (Ib) [%]
YARD PCG-X										
PCG-X.G0	EAE	50	3L+PEN	ALUMINIUM		20	5000	120	$1,44*10^{10}$	0
POD PTX-X										
PTX-X.D0	EAE	20	3L+PEN	ALUMINIUM		7	2000	80	$6,4*10^{9}$	0,132

Legal Office:
DBA S.p.A.
Piazza Roma 19
32045, Santo Stefano di Cadore (BL)
Italy
+39 0422 693511
dbaprogetti@pec.dbagroup.it
www.dbagroup.it

Branch Office:
DBA S.p.A.
Via Natale Battaglia 10
20127, Milan
Italy
+39 0422 693511
dbaprogetti@pec.dbagroup.it
www.dbagroup.it

COMUNE DI SIZIANO

Principal: **STACK INFRASTRUCTURE**

Project:

MIL07

MIL07-DBA-XX-XX-SP-E-60001 **13038001**			Title: **OFCI Specification Power Module**
PP0 - RIBA 3	**IES**	**60001**	
Prog.	**D. De Bettin** **S. Busetti**	**PM**	**A. Masiero**
BIMM	**S. Di Biase**	**BIMC**	**R. Sodano**

Rev	EDITED	CHECKED	APPROVED	DATE	DESCRIPTION
P01	D. TOFFALI	S. SONCINI	A. MASIERO	07/11/2025	S4 - Riba 3 Submittal

Client:	STACK INFRASTRUCTURE
Project:	MIL07
Document:	OFCI Specification - Power Module
Doc ID:	MIL07-DBA-XX-XX-SP-E-60001
Date:	07/11/2025
Revision:	P01

MV CONTAINER					
Item	**Description**		**Units**	**Engineer Specifies**	**Vendor Proposes**
1.00	**General Information**				
1.01	Site		-	Milano, Siziano	
1.02	System		-	Container	
1.03	Equipment reference(s):		-	See references	
1.04	Location:		-	Yard	
1.05	Manufacturing location		-	Vendor to confirm >>	
1.06	FAT Location		-	Vendor to confirm >>	
2.00	**General Characteristics**				
2.01	Material		-	Metallic structure	
2.02	Anti-rust protection			Yes	
2.03	Ambient Temperature		°C	40	
2.04	Degree of Protection (minimum)		-	IP20	
2.05	Installation Altitude		m	< 1000	
2.06	Earthing system			Provided by the container vendor	
3.00	**Lighting system**				
3.01	Lux level		lux	300	
3.02	Control strategy			Pushbutton at every door	
3.03	IP degree protection		IP	55	
3.04	External lighting fittings			Yes, above every door	
4.00	**EmergencyLighting system**				
4.01	Autonomous emergency lighting			Yes	
4.02	Integrated battery pack - 2 hours			Yes	
4.03	External emergency lamps			Yes, above every door	
5.00	**Smoke detection system**				
5.01	Smoke detectors			Thermic detectors in the trafo compartment multicriteria detector in the MV compartment	
5.02	Smoke control panel			In the LV control panel	
5.03	I/O modules			Provided by vendor to interconnect the smoke detection system to the DC main system	
6.00	**Incoming / Outgoing Power Circuit Entry / Exit**				
6.01	Cable entry			MV cable entry from the bottom	
6.02	Roxtec frame		-	Provided by vendor	
6.03	Outgoing Connection		-	From container side - see drawings	
7.00	**Access control system**				
7.01	Access control system			Provided by container vendor according to design requirment for the MV compartment	
8.00	**Maximum Dimensions**				
8.01	System (incl. cable or busbar box if required)	Length	mm	Vendor to confirm >>	
8.02		Height	mm	Vendor to confirm >>	
8.03		Depth	mm	Vendor to confirm >>	
8.04		Weight	kg	Vendor to confirm >>	

Client:	STACK INFRASTRUCTURE
Project:	MIL07
Document:	OFCI Specification - Power Module
Doc ID:	MIL07-DBA-XX-XX-SP-E-60001
Date:	07/11/2025
Revision:	P01

LV1 CONTAINER					
Item	**Description**		**Units**	**Engineer Specifies**	**Vendor Proposes**
1.00	**General Information**				
1.01	Site		-	Milano, Siziano	
1.02	System		-	Container	
1.03	Equipment reference(s):		-	see references	
1.04	Location:		-	Yard	
1.05	Manufacturing location		-	Vendor to confirm >>	
1.06	FAT Location		-	Vendor to confirm >>	
2.00	**General Characteristics**				
2.01	Material		-	Metallic structure	
2.02	Anti-rust protection			Yes	
2.03	Ambient Temperature		°C	40	
2.04	Degree of Protection (minimum)		-	IP54	
2.05	Installation Altitude		m	< 1000	
2.06	Earthing system			Provided by the container vendor	
3.00	**Lighting system**				
3.01	Lux level		lux	300	
3.02	Control strategy			Pushbutton at evey door	
3.03	IP degree protection		IP	55	
3.04	External lighting fittings			Yes, a couple of lamps installed along the long side of each container	
4.00	**EmergencyLighting system**				
4.01	Autonomous emergency lighting			Yes	
4.02	Integrated battery pack - 2 hours			Yes	
4.03	External emergency lamps			Yes, one autonomous lamps installed in the middle of the long side of the container	
5.00	**Smoke detection system**				
5.01	Smoke detectors			Multicriteria detectors, with indipendet controller panel	
5.02	Aspirating smoke detection			Yes, in the return air path of the CRAHs	
5.03	I/O modules			Provided by vendor to interconnect the smoke detection system to the DC main system	
6.00	**Incoming / Outgoing Power Circuit Entry / Exit**				
6.01	Cable entry			From container side - see drawings	
7.02	Roxtec frame		-	Provided by vendor	
7.03	Outgoing Connection		-	From container side - see drawings	
7.00	**Access control system**				
7.01	Access control system			Provided by container vendor according to design requirment	
8.00	**Maximum Dimensions**				
8.01	System (incl. cable or busbar box if required)	Length	mm	Vendor to confirm >>	
8.02		Height	mm	Vendor to confirm >>	
8.03		Depth	mm	Vendor to confirm >>	
8.04		Weight	kg	Vendor to confirm >>	

Client:	STACK INFRASTRUCTURE
Project:	MIL07
Document:	OFCI Specification - Power Module
Doc ID:	MIL07-DBA-XX-XX-SP-E-60001
Date:	07/11/2025
Revision:	P01

LV2 CONTAINER					
Item	**Description**		**Units**	**Engineer Specifies**	**Vendor Proposes**
1.00	**General Information**				
1.01	Site		-	Milano, Siziano	
1.02	System		-	Container	
1.03	Equipment reference(s):		-	see references	
1.04	Location:		-	Yard	
1.05	Manufacturing location		-	Vendor to confirm >>	
1.06	FAT Location		-	Vendor to confirm >>	
2.00	**General Characteristics**				
2.01	Material		-	Metallic structure	
2.02	Anti-rust protection			Yes	
2.03	Ambient Temperature		°C	40	
2.04	Degree of Protection (minimum)		-	IP54	
2.05	Installation Altitude		m	< 1000	
2.06	Earthing system			Provided by the container vendor	
3.00	**Lighting system**				
3.01	Lux level		lux	300	
3.02	Control strategy			Pushbutton at evey door	
3.03	IP degree protection		IP	55	
3.04	External lighting fittings			Yes, a couple of lamps installed along the long side of each container	
4.00	**EmergencyLighting system**				
4.01	Autonomous emergency lighting			Yes	
4.02	Integrated battery pack - 2 hours			Yes	
4.03	External emergency lamps			Yes, one autonomous lamps installed in the middle of the long side of the container	
5.00	**Smoke detection system**				
5.01	Smoke detectors			Multicriteria detectors, with indipendet controller panel	
5.02	Aspirating smoke detection			Yes, in the return air path of the CRAHs	
5.03	I/O modules			Provided by vendor to interconnect the smoke detection system to the DC main system	
6.00	**Incoming / Outgoing Power Circuit Entry / Exit**				
6.01	Cable entry			From container side - see drawings	
7.02	Roxtec frame		-	Provided by vendor	
7.03	Outgoing Connection		-	From container side - see drawings	
7.00	**Access control system**				
7.01	Access control system			Provided by container vendor according to design requirment	
8.00	**Maximum Dimensions**				
8.01	System (incl. cable or busbar box if required)	Length	mm	Vendor to confirm >>	
8.02		Height	mm	Vendor to confirm >>	
8.03		Depth	mm	Vendor to confirm >>	
8.04		Weight	kg	Vendor to confirm >>	

Client:	STACK INFRASTRUCTURE
Project:	MIL07
Document:	OFCI Specification - Power Module
Doc ID:	MIL07-DBA-XX-XX-SP-E-60001
Date:	07/11/2025
Revision:	P01

MV RMU GENERAL				
Item	**Description**	**Units**	**Engineer Specifies**	**Vendor Proposes**
1.01	Site	-	Milano, Siziano	
1.02	Number of units day ultimate	-	9	
1.03	Number of units day 1	-	8 (Nr. 6 for critical POD, 1 for the R system, 1 for housing system)	
1.04	Equipment References	-	-	
1.05	Location	-	Indoor / Power Module Switchrooms	
Particulars of System (not equipment rating)				
1.06	Nominal voltage	kV	22	
1.07	Frequency	Hz	50	
1.08	Number of phases	-	3	
1.09	Neutral earthing - utility supply	-	Utility system	
1.10	Neutral earthing - site generator supply	-	Neutral Earth Link at LV	
1.11	Earthing	-	Integrated	
Switchgear Characteristics				
1.12	Rated voltage	kV	24	
1.13	Rated power frequency withstand voltage	kV	50	
1.14	Rated impulse withstand voltage	kV	125	
1.15	Rated busbar current	A	1250	
1.16	Busbar arrangement	-	Single, 3 Phases	
1.17	Rated short time current (kA for 3 seconds, offer alternative for 1 second)	kA	20	
1.18	Rated short circuit breaking current	kA	20	
1.19	Rated peak withstand current	kA	63	
1.20	Rated frequency	Hz	50	
1.21	IEC 62271-200 Losso of service Continuity	-	LSC 2B	
1.22	IEC 62271-200 Partition Class	-	PM	
1.23	IEC 62271-200 Internal Arc Classification	-	IAC AFL 20 kA 1s	
1.24	Auxiliary supply voltages - Spring charging motor	V	230 Vac - no break supply	
1.25	Auxiliary supply voltages - Control and protection	V	230 Vac / 24 Vdc - no break supply	
1.26	Auxiliary supply voltages - Anti-condensation heaters	V	230 Vac	
1.27	Degree of ingress protection (sealed MV parts)	-	IP65	
1.28	Degree of ingress protection (LV compartment)	-	IP3X	
1.29	Maximum ambient temperature	°C	40	
1.30	Minimum ambient temperature	°C	-10	
1.31	Extendable at each end?	Yes/No	No	
1.32	Floor type (raised/solid)	-	Solid	
1.33	Plinth	Yes/No	Yes	
1.34	Under floor steel support frame	Yes/No	Yes for cable entry	
1.35	Circuit breaker lifting trolley provided (how many)	-	1	
1.36	Altitude at site	m	<1000m	
1.37	Rated operating sequence of circuit breakers	-	O-0.3s-CO-3min-CO	
1.38	Colour - all panels	-	Manufacturer default	
1.39	Colour - identification banding	-	None	
1.40	Colour - circuit mimic lines	-	Black	
1.41	Busbar Insulation	GIS/AIS	GIS (Blue gas / SF6 Free) + AIS option	
1.42	Arc Flash Mitigation	-	Integral	

Note 1: A damping winding and resistor are to be included for suppression of ferroresonance.
Note 2: Vendor to provide dimensioned drawing of proposed RMU size.

Client:	STACK INFRASTRUCTURE
Project:	MIL07
Document:	OFCI Specification - Power Module
Doc ID:	MIL07-DBA-XX-XX-SP-E-60001
Date:	07/11/2025
Revision:	P01

TYPICAL RMU				
Item	**Panel Reference**	**Panel Type**	**Panel Label**	
1.01	1	P01	Line 1	1
1.02			Line 2	Loop in Ring Switch
1.03			Line 3	
1.04	2	P01	Line 1	2
1.05			Line 2	Loop out Ring Switch
1.06			Line 3	
1.07	3	P02	Line 1	3
1.08			Line 2	Transformer Feeder
1.09			Line 3	
1.10				
1.11				
1.12				
1.13				
1.14				
1.15				
1.16				
1.17				
1.18				
1.19				
1.20				
1.21				
1.22				
1.23				
1.24				
1.25				
1.26				
1.27				
1.28				
1.29				
1.30				
1.31				
1.32				
1.33				
1.34				
1.35				
1.36				

Note 1: Switchpanel labels shall be provided both at the front of each panel and at the rear of each panel on a fixed component of the switchboard (i.e. not on removable panels or covers).

Client:	STACK INFRASTRUCTURE
Project:	MIL07
Document:	OFCI Specification - Power Module
Doc ID:	MIL07-DBA-XX-XX-SP-E-60001
Date:	07/11/2025
Revision:	P01

PANEL TYPE - P01 - RING SWITCH				
Item	**Description**		**Engineer Specifies**	**Vendor Proposes**
1.01	Circuit breaker current rating		1250	
1.02	Circuit breaker pattern		Fixed	
1.03	Interrupter type		SF6 free MV breaker (VCB)	
1.04	Control		Manual and electrical local/remote	
1.05	Operating mechanism		Motor charged spring	
1.06	Earthing		Circuit side/Three positions (ON, OFF & Earth)	
1.07	CT1	Ratio		
1.08		VA/Class		
1.09		Function		
1.10	CT2	Ratio		
1.11		VA/Class		
1.12		Function		
1.13	Voltage Transformer (Notes 1 and 3)	Pattern		
1.14		Ratio		
1.15		VA/Class		
1.16		Windings		
1.17		Connection		
1.18		Function		
1.19	Relay 1 Protection:			
1.20	Current Transformer:			
1.21	Relay 2 Protection:			
1.22	Current Transformer:			
1.23	Metering	Supplier		
1.24		Manufacturer		
1.25		Model		
1.26		Comms		
1.27		Type		
1.28		Power supply		
1.29	Switches and Push Buttons		Local/Remote	
1.30			Open/Close	
1.31			Spring charging motor auto/off	
1.32			Lamp test	
1.33				
1.34	Indications		Closed/open	
1.35			Fault trip	
1.36			Trip circuit healthy	
1.37			Voltage indicators	
1.38			Fault Passage Indicator	
1.39			Earth Status	
1.40	Surge protection		Circuit connected	
1.41	Miscellaneous (Note 2)		Capacitive voltage detecting system	
1.42			Refer to drawings for key interlock between RMU loop in breaker and MV ring feeder in MV substation	
1.43				
1.44				
1.45				
1.46	Cables	Top/bottom Entry	Bottom	
1.47		Cable type	RG26H1M16 CPR Cca-s1b,d1,a1	
1.48		Conductor	Copper	
1.49		Cores	By Power Module Vendor	
1.50		Size	By Power Module Vendor	
1.51		Number of cables	By Power Module Vendor	

Note 1: Multiple functions may be included in one relay, unless otherwise stated, for example discrete relays.
Note 2: Digital inputs and outputs required for PMS/SCADA/PLC system are to be developed by the vendor.
Note 3: A damping winding and resistor are to be included for suppression of ferroresonance.
Note 4: The Supplier shall allow to reconfigure the switchboard cubicle order at no extra cost to the Client.
Note 5: All switches shall have padlock facility.
Note 6: Local/remote and spring charging motor auto/off shall have the switch position repeated to customer terminals or communications I/O as indicated in the I/O points data sheet.
Note 7: Surge suppression as required.

Client:	STACK INFRASTRUCTURE
Project:	MIL07
Document:	OFCI Specification - Power Module
Doc ID:	MIL07-DBA-XX-XX-SP-E-60001
Date:	07/11/2025
Revision:	P01

PANEL TYPE - P02 - TRANSFORMER FEEDER				
Item	**Description**		**Engineer Specifies**	**Vendor Proposes**
1.01	Circuit breaker current rating		630	
1.02	Circuit breaker pattern		Fixed	
1.03	Interrupter type		SF6 free MV breaker (VCB)	
1.04	Control		Manual and electrical local/remote	
1.05	Operating mechanism		Motor charged spring	
1.06	Disconnector / Earthing		Circuit side/Three positions (ON, OFF & Earth)	
1.07	CT1	Ratio	400 / 1A	
1.08		VA/Class	5P20	
1.09		Function	Metering	
1.10	CT2	Ratio	400 / 1A	
1.11		VA/Class	PX	
1.12		Function	Differential Protection 87T	
1.13				
1.14				
1.15				
1.16	Voltage Transformer (Notes 1 and 3)	Pattern		
1.17		Ratio		
1.18		VA/Class		
1.19		Windings		
1.20		Connection		
1.21		Function		
1.22	Relay 1 Protection:		Refer to SLDs, 2nd Harmonic Restraint, Metering	
1.23	Relay Example:		Vendor to confirn	
1.24	Current Transformer:		CT1	
1.25	Relay 2 Protection:		87T (discrete relay)	
1.26	Relay Example:		Vendor to confirn	
1.27	Current Transformer:		CT2	
1.28	Metering	Supplier	-	
1.29		Manufacturer	-	
1.30		Model	-	
1.31		Comms	IEC 61850	
1.32		Type	Power Quality Meter	
1.33		Power supply	230 Vac - no break supply	
1.34	Switches and Push Buttons		Local/Remote	
1.35			Open/Close	
1.36			Spring charging motor auto/off	
1.37			Lamp test	
1.38				
1.39	Indications		Closed/open	
1.40			Fault trip	
1.41			Trip circuit healthy	
1.42			Voltage indicators	
1.43			Earth Status	
1.44	Surge protection		Circuit connected	
1.45	Miscellaneous (Note 2)		CT & VT test blocks	
1.46			IDMT Protection Setting Group Selection	
1.47			IDMT Protection Blocking	
1.48			Capacitive voltage detecting system	
1.49				
1.50	Cables	Top/bottom Entry	Bottom	
1.51		Cable type	RG26H1M16 CPR Cca-s1b,d1,a1	
1.52		Conductor	Copper	
1.53		Cores	By Power Module Vendor	
1.54		Size	By Power Module Vendor	
1.55		Number of cables	By Power Module Vendor	

Note 1: Multiple functions may be included in one relay, unless otherwise stated, for example discrete relays.
Note 2: Digital inputs and outputs required for PMS/SCADA/PLC system are to be developed by the vendor.
Note 3: A damping winding and resistor are to be included for suppression of ferroresonance.
Note 4: The Supplier shall allow to reconfigure the switchboard cubicle order at no extra cost to the Client.
Note 5: All switches shall have padlock facility.
Note 6: Local/remote and spring charging motor auto/off shall have the switch position repeated to customer terminals or communications I/O as indicated in the I/O points data sheet.
Note 7: Surge suppression as required.

Client:	STACK INFRASTRUCTURE
Project:	MIL07
Document:	OFCI Specification - Power Module
Doc ID:	MIL07-DBA-XX-XX-SP-E-60001
Date:	07/11/2025
Revision:	P01

TRANSFORMER 3,5MVA				
Item	**Description**	**Units**	**Engineer Specifies**	**Vendor Proposes**
1.00	**General Information**			
1.01	Site	-	Milano, Siziano	
1.02	Location:	-	Indoor, LV container	
1.03	Number of units day ultimate	-	8	
1.04	Number of unit day 1	-	7	
1.05	Equipment references	-	See schematics	
2.00	**Rating**			
2.01	AN Rating	MVA	3,5	
2.02	AF rating	MVA	Vendor to confirm >>	
3.00	**Windings**			
3.01	Winding Ratio (Primary / Secondary)	kV	11 / 0.415	
3.02	Winding Ratio specified at Full load / No load		0.4	
3.03	Primary Winding Insulation Ratings:	-		
3.04	Um	kV	17,5	
3.05	Impulsive voltage withstand capability @50Hz for 1 minute	kV	38	
3.06	Impulsive voltage withstand capability according to IEC 60076-11:2018	kV	75-95	
3.07	Insulation type		Cast Resin	
3.08	Connection		Cables from the bottom	
3.09	Transient voltage suppression to be provided		Surge arrestor in the MV swithcboard	
3.10	Partial discharge monitoring		NA	
3.11	Secondary Winding Insulation Ratings:	-		
3.12	Um	kV	1.1	
3.13	Impulsive voltage withstand capability AC	kV	3	
3.14	Impulsive voltage withstand capability LI	kV	-	
3.15	Insulation type		Pre-Impregnated	
3.16	Connection		Busbar to the LV main swithcboard	
3.17	Transient voltage suppression to be provided		Surge arrestor within the LV swithcboard	
4.00	**Core**			
4.01	Core costruction		Laminated Steel	
5.00	**System**			
5.01	Frequency	Hz	50	
5.02	Phases		3	
5.03	Harmonic Capability		K13	
5.04	Environment Class		E2	
5.05	Climatic Class		C2	
5.06	Fire Class		F1	
5.07	Primary Winding Material		Cu or Al	
5.08	Secondary Winding Material		Cu or Al	
5.09	Primary Fault level	kA	19	
5.10	Impedence @ 120°C (referred to AN rating)	%	12	
5.11	Impedence Tolerance / Guarantee	%	-10% to +10%	
5.12	Connection Symbol		Dyn11	
5.13	Insulation Class	°C	155 (F)	
5.14	Temperature Rise	K	80 (B)	
6.00	**Cooling**			
6.01	Ambient Temperature (Max)	°C	40	
6.02	Ambient Temperature (Min)	°C	-10	
6.03	Ambient Temperature (Monthly Average)	°C	30	
6.04	Ambient Temperature (Daily Average)	°C	30	
6.05	Ambient Temperature (Annual Average)	°C	30	
6.06	Number of duty fans = two		Vendor to confirm >>	
6.07	Number of redundant fans		N	
6.08	Fan full load current	A	Vendor to confirm >>	
6.09	Fan motor full load power	kW	Vendor to confirm >>	
6.10	Auxiliary voltage (fans)	V/A/Hz	Vendor to confirm >>	
6.11	Winding temperature sensors	Nr	3 PT100 sensors + additional PT100 sensor on transformer breech	
6.12	Temperature controller		Yes - vendor to confirm	
7.00	**Environmental**			
7.01	Sound power level	dB(A)	<80 dB(A)	
7.02	Noise level conditions		Excluding enclosure	
7.03	Altitude	m	<1000	
7.04	Transformer degree of protection		Vendor to confirm >>	
8.00	**Losses**			
8.01	Commission regulation (EU) No 548/2014 losses			
8.02	No load losses maximum	W	Tier 2 EU Directive	
8.03	load losses (AN rating) maximum	W	Tier 2 EU Directive	
8.04	load losses (AF rating) maximum including fans	W	NA	
8.05	Commission regulation (EU) No 548/2014 PEI			
8.06	AN rating	%	Vendor to confirm >>	
8.07	AF rating	%	Vendor to confirm >>	
8.08	Losses tolerance / guarantee		-10% to +10%	

Client:	STACK INFRASTRUCTURE
Project:	MIL07
Document:	OFCI Specification - Power Module
Doc ID:	MIL07-DBA-XX-XX-SP-E-60001
Date:	07/11/2025
Revision:	P01

TRANSFORMER 3,5MVA				
Item	**Description**	**Units**	**Engineer Specifies**	**Vendor Proposes**
9.00	**Tap charger**			
9.01	Tap charger type		De-energised bolted	
9.02	Tappings	%	-5% to +5% in 2,5%	
9.03	Tap charger winding		Primary	
10.00	**Cooling**			
10.01	Transformer weight	kg	Vendor to confirm >>	
10.02	Transformer width	mm	Vendor to confirm >>	
10.03	Transofmer Depth	mm	Vendor to confirm >>	
10.04	Transformer Height	mm	Vendor to confirm >>	
10.05	Enclosure supplied by vendor (Yes or Not)		Yes	
10.06	Enclosure weight	kg	Vendor to confirm >>	
10.07	Enclosure width (max)	mm	Vendor to confirm >>	
10.08	Enclosure depth (max)	mm	Vendor to confirm >>	
10.09	Enclosure heigth (max)	mm	Vendor to confirm >>	
10.10	Plinth height	mm	NA	
10.11	Enclosure color		Vendor's standard	
10.12	Base frame structural requirments			
10.13	structural loading - maximum unform distributed load		10 kN/m2	
10.14	structural loading - maximum point load		4,5 kN	
11.00	**Testing**			
11.01	Factory acceptance tests		As specification	
11.02	Factory acceptance full load test duration		To IEC	
11.03	Place of manufacture (including windings)		Vendor to confirm >>	
11.04	FAT location		Vendor to confirm >>	
11.05	Site acceptance test		As specification	

Client:	STACK INFRASTRUCTURE
Project:	MIL07
Document:	OFCI Specification - Power Module
Doc ID:	MIL07-DBA-XX-XX-SP-E-60001
Date:	07/11/2025
Revision:	P01

TRANSFORMER 1,25MVA				
Item	**Description**	**Units**	**Engineer Specifies**	**Vendor Proposes**
1.00	**General Information**			
1.01	Site	-	Milano, Siziano	
1.02	Location:	-	Indoor, LV container	
1.03	Number of units day ultimate	-	1	
1.04	Number of unit day 1	-	1	
1.05	Equipment references	-	See schematics	
2.00	**Rating**			
2.01	AN Rating	MVA	1,25	
2.02	AF rating	MVA	Vendor to confirm >>	
3.00	**Windings**			
3.01	Winding Ratio (Primary / Secondary)	kV	11 / 0.415	
3.02	Winding Ratio specified at Full load / No load		0.4	
3.03	Primary Winding Insulation Ratings:	-		
3.04	Um	kV	17,5	
3.05	Impulsive voltage withstand capability @50Hz for 1 minute	kV	38	
3.06	Impulsive voltage withstand capability according to IEC 60076-11:2018	kV	75-95	
3.07	Insulation type		Cast Resin	
3.08	Connection		Cables from the bottom	
3.09	Transient voltage suppression to be provided		Surge arrestor in the MV swithcboard	
3.10	Partial discharge monitoring		NA	
3.11	Secondary Winding Insulation Ratings:	-		
3.12	Um	kV	1.1	
3.13	Impulsive voltage withstand capability AC	kV	3	
3.14	Impulsive voltage withstand capability LI	kV	-	
3.15	Insulation type		Pre-Impregnated	
3.16	Connection		Busbar to the LV main swithcboard	
3.17	Transient voltage suppression to be provided		Surge arrestor within the LV swithcboard	
4.00	**Core**			
4.01	Core costruction		Laminated Steel	
5.00	**System**			
5.01	Frequency	Hz	50	
5.02	Phases		3	
5.03	Harmonic Capability		K13	
5.04	Environment Class		E2	
5.05	Climatic Class		C2	
5.06	Fire Class		F1	
5.07	Primary Winding Material		Cu or Al	
5.08	Secondary Winding Material		Cu or Al	
5.09	Primary Fault level	kA	19	
5.10	Impedence @ 120°C (referred to AN rating)	%	12	
5.11	Impedence Tolerance / Guarantee	%	-10% to +10%	
5.12	Connection Symbol		Dyn11	
5.13	Insulation Class	°C	155 (F)	
5.14	Temperature Rise	K	80 (B)	
6.00	**Cooling**			
6.01	Ambient Temperature (Max)	°C	40	
6.02	Ambient Temperature (Min)	°C	-10	
6.03	Ambient Temperature (Monthly Average)	°C	30	
6.04	Ambient Temperature (Daily Average)	°C	30	
6.05	Ambient Temperature (Annual Average)	°C	30	
6.06	Number of duty fans = two		Vendor to confirm >>	
6.07	Number of redundant fans		N	
6.08	Fan full load current	A	Vendor to confirm >>	
6.09	Fan motor full load power	kW	Vendor to confirm >>	
6.10	Auxiliary voltage (fans)	V/A/Hz	Vendor to confirm >>	
6.11	Winding temperature sensors	Nr	3 PT100 sensors + additional PT100 sensor on transformer breech	
6.12	Temperature controller		Yes - vendor to confirm	
7.00	**Environmental**			
7.01	Sound power level	dB(A)	<80 dB(A)	
7.02	Noise level conditions		Excluding enclosure	
7.03	Altitude	m	<1000	
7.04	Transformer degree of protection		Vendor to confirm >>	
8.00	**Losses**			
8.01	Commission regulation (EU) No 548/2014 losses			
8.02	No load losses maximum	W	Tier 2 EU Directive	
8.03	load losses (AN rating) maximum	W	Tier 2 EU Directive	
8.04	load losses (AF rating) maximum including fans	W	NA	
8.05	Commission regulation (EU) No 548/2014 PEI			
8.06	AN rating	%	Vendor to confirm >>	
8.07	AF rating	%	Vendor to confirm >>	
8.08	Losses tolerance / guarantee		-10% to +10%	

Client:	STACK INFRASTRUCTURE
Project:	MIL07
Document:	OFCI Specification - Power Module
Doc ID:	MIL07-DBA-XX-XX-SP-E-60001
Date:	07/11/2025
Revision:	P01

TRANSFORMER 1,25MVA				
Item	**Description**	**Units**	**Engineer Specifies**	**Vendor Proposes**
9.00	**Tap charger**			
9.01	Tap charger type		De-energised bolted	
9.02	Tappings	%	-5% to +5% in 2,5%	
9.03	Tap charger winding		Primary	
10.00	**Cooling**			
10.01	Transformer weight	kg	Vendor to confirm >>	
10.02	Transformer width	mm	Vendor to confirm >>	
10.03	Transofmer Depth	mm	Vendor to confirm >>	
10.04	Transformer Height	mm	Vendor to confirm >>	
10.05	Enclosure supplied by vendor (Yes or Not)		Yes	
10.06	Enclosure weight	kg	Vendor to confirm >>	
10.07	Enclosure width (max)	mm	Vendor to confirm >>	
10.08	Enclosure depth (max)	mm	Vendor to confirm >>	
10.09	Enclosure heigth (max)	mm	Vendor to confirm >>	
10.10	Plinth height	mm	NA	
10.11	Enclosure color		Vendor's standard	
10.12	Base frame structural requirments			
10.13	structural loading - maximum unform distributed load		10 kN/m2	
10.14	structural loading - maximum point load		4,5 kN	
11.00	**Testing**			
11.01	Factory acceptance tests		As specification	
11.02	Factory acceptance full load test duration		To IEC	
11.03	Place of manufacture (including windings)		Vendor to confirm >>	
11.04	FAT location		Vendor to confirm >>	
11.05	Site acceptance test		As specification	

Client:	STACK INFRASTRUCTURE
Project:	MIL07
Document:	OFCI Specification - Power Module
Doc ID:	MIL07-DBA-XX-XX-SP-E-60001
Date:	07/11/2025
Revision:	P01

LV SWITCHBOARDS - PLI/MSS				
Item	**Description**	**Units**	**Specifications**	**Vendor Proposal**
1.00	**General Information**			
1.01	Site	-	Milano, Siziano	
1.02	Location	-	Power Module Switchrooms	
1.03	Number of units day ultimate	-	Refer to Drawings - 6 critical POD, 2 reserve POD	
1.04	Number of units day 1	-	Refer to Drawings - 6 critical POD, 1 reserve POD	
1.05	Equipment references	-	See schematics	
2.00	**General Information**			
2.01	Nominal voltage	VAC	400	
2.02	1ph, Aux Voltage	VAC	230	
2.03	Frequency	Hz	50	
2.04	Ingress Protection	IP	IP31	
2.05	Form of Separation	-	Form 4B Type 6	
2.06	Total Heat Dissipation	-	Vendor to confirm >>	
2.07	Earthing System	-	TN-C for PLI main incomers, TN-S for all the rest	
2.08	Ambient Temperature (Min/Max)	-	0 / 40 °C	
3.00	**Panel Details**			
3.01	Cable Entry / Exit		Top / Top	
3.02	Main incomers connection (cable/busbar)		busbar for PLI, cable for MSS	
3.03	Plinth Height	(H)	N/A	
3.04	Maximum Panel Height	(H)	Vendor to confirm >>	
3.05	Maximum Panel Width	(W)	Vendor to confirm >>	
3.06	Maximum Panel Depth	(D)	Vendor to confirm >>	
3.07	Panel Weight	(kg)	Vendor to confirm >>	
3.08	Paint Finish (Container)	RAL	RAL9003	
3.09	Paint Finish Internal	RAL	Vendor to confirm >>	
4.00	**Compliance Details**			
4.01	L. V. Switchgear Internal Standard		IEC/EN 61439-2	
4.02	Low Voltage Directive		2006/95/EC	
4.03	Quality Assurance System		IS EN ISO 9001:2015	
4.04	EMC Directive		2014/30 CE	
4.05	Ambient Temperature (Min/Max)		0 / 40 °C	
4.06	Altitude	m	93	
4.07	Relative Humidity		0.4	
5.00	**Main Busbar Details**			
5.01	3ph Busbar Type / Rating	(A)	Refer to Schematics	
5.02	3ph Quantity and Size		Busbar	
5.03	Neutral Busbar Rating		100%	
5.04	Fault Rating	(kA)	Refer to Schematics	
5.05	Busbar Material	Cu/Al	Al preferred - Cu accepted	
5.06	Busbar Insulation	Yes/No	Vendor to confirm >>	
5.07	Thermal Imaging Facility	Yes/No	Yes	

Client:	STACK INFRASTRUCTURE
Project:	MIL07
Document:	OFCI Specification - Power Module
Doc ID:	MIL07-DBA-XX-XX-SP-E-60001
Date:	07/11/2025
Revision:	P01

LV SWITCHBOARD - MDB				
Item	**Description**	**Units**	**Specifications**	**Vendor Proposal**
1.00	**General Information**			
1.01	Site	-	Milano, Siziano	
1.02	Location	-	Power Module Switchrooms	
1.03	Number of units day ultimate	-	Refer to Drawings - 6 critical POD, 2 reserve POD	
1.04	Number of units day 1	-	Refer to Drawings - 6 critical POD, 1 reserve POD	
1.05	Equipment references	-	See schematics	
2.00	**General Information**			
2.01	Nominal voltage	VAC	400	
2.02	1ph, Aux Voltage	VAC	230	
2.03	Frequency	Hz	50	
2.04	Ingress Protection	IP	IP31	
2.05	Form of Separation	-	Form 2B	
2.06	Total Heat Dissipation	-	Vendor to confirm >>	
2.07	Earthing System	-	TN-S	
2.08	Ambient Temperature (Min/Max)	-	0 / 40 °C	
3.00	**Panel Details**			
3.01	Cable Entry / Exit		Top / Top	
3.02	Main incomers connection (cable/busbar)		cable	
3.03	Plinth Height	(H)	N/A	
3.04	Maximum Panel Height	(H)	Vendor to confirm >>	
3.05	Maximum Panel Width	(W)	Vendor to confirm >>	
3.06	Maximum Panel Depth	(D)	Vendor to confirm >>	
3.07	Panel Weight	(kg)	Vendor to confirm >>	
3.08	Paint Finish (Container)	RAL	RAL9003	
3.09	Paint Finish Internal	RAL	Vendor to confirm >>	
4.00	**Compliance Details**			
4.01	L. V. Switchgear Internal Standard		IEC/EN 61439-2	
4.02	Low Voltage Directive		2006/95/EC	
4.03	Quality Assurance System		IS EN ISO 9001:2015	
4.04	EMC Directive		2014/30 CE	
4.05	Ambient Temperature (Min/Max)		0 / 40 °C	
4.06	Altitude	m	93	
4.07	Relative Humidity		0.4	
5.00	**Main Busbar Details**			
5.01	3ph Busbar Type / Rating	(A)	Refer to Schematics	
5.02	3ph Quantity and Size		Busbar	
5.03	Neutral Busbar Rating		100%	
5.04	Fault Rating	(kA)	Refer to Schematics	
5.05	Busbar Material	Cu/Al	Cu	
5.06	Busbar Insulation	Yes/No	Vendor to confirm >>	
5.07	Thermal Imaging Facility	Yes/No	No	

Client:	STACK INFRASTRUCTURE
Project:	MIL07
Document:	OFCI Specification - Power Module
Doc ID:	MIL07-DBA-XX-XX-SP-E-60001
Date:	07/11/2025
Revision:	P01

LV SERVICE PANELS / DISTRIBUTION BOARDS - GDB				
Item	**Description**	**Units**	**Specifications**	**Vendor Proposal**
1.00	**General Information**			
1.01	Site	-	Milano, Siziano	
1.02	Location	-	Refer to Drawings	
1.03	Number of units day ultimate	-	Refer to Drawings	
1.04	Number of units day 1	-	Refer to Drawings	
1.05	Equipment references	-	See schematics	
2.00	**General Information**			
2.01	Nominal voltage	VAC	400	
2.02	1ph, Aux Voltage	VAC	230	
2.03	Frequency	Hz	50	
2.04	Ingress Protection	IP	IP31	
2.05	Form of Separation	-	Form 2B	
2.06	Total Heat Dissipation	-	Vendor to confirm >>	
2.07	Earthing System	-	TN-S	
2.08	Ambient Temperature (Min/Max)	-	0 / 40 °C	
3.00	**Panel Details**			
3.01	Cable Entry / Exit		Top / Top	
3.02	Plinth Height	(H)	N/A	
3.03	Maximum Panel Height	(H)	Vendor to confirm >>	
3.04	Maximum Panel Width	(W)	Vendor to confirm >>	
3.05	Maximum Panel Depth	(D)	Vendor to confirm >>	
3.06	Panel Weight	(kg)	Vendor to confirm >>	
3.07	Paint Finish (Container)	Colour	RAL9003	
3.08	Paint Finish Internal	Colour	Vendor to confirm >>	
4.00	**Main Busbar Details**			
4.01	3ph Busbar Type / Rating	(A)	Refer to Drawings	
4.02	3ph Quantity and Size		Busbar	
4.03	Neutral Busbar Rating		100%	
4.04	Fault Rating Icw	(kA)	10kA 1sec	
4.05	Peak Fault Rating Ipk	(kA)	22kA 1sec	
4.06	Busbar Material	Cu/Al	Cu	
4.07	Busbar Insulation	Yes/No	Vendor to confirm >>	

Client:	STACK INFRASTRUCTURE
Project:	MIL07
Document:	OFCI Specification - Power Module
Doc ID:	MIL07-DBA-XX-XX-SP-E-60001
Date:	07/11/2025
Revision:	P01

IT UPS				
Item	**Description**	**Units**	**Engineer Specifies**	**Vendor Proposes**
1.00	**General Information**			
1.01	Site	-	Milano, Siziano	
1.02	System(s)	-	IT UPS Systems	
1.03	Equipment reference(s):	-		
1.04	Location	-	Primary Critical & Reserve Module Switchrooms	
1.05	Manufacturing location	-	Vendor to confirm >>	
1.06	FAT Location	-	Vendor to confirm >>	
2.00	**General Characteristics**			
2.01	Number of units day ultimate		2x1000kW UPS per 6 nr. PCS & 2 nr. RCS	
2.02	Number of units day 1		Refer to Drawings	
2.03	UPS Modules per System	-	Vendor to confirm >>	
2.04	Sub-modules per UPS Module	-	Vendor to confirm >>	
2.05	System Rating	kVA/kW	1055kVA / 1000 kW	
2.06	Module Rating	kVA/kW	Vendor to confirm >>	
2.07	Sub-module Rating	kVA/kW	Vendor to confirm >>	
2.08	Internal Bypass	Y/N	Yes	
2.09	External Automatic Bypass Switch	Y/N	No	
2.10	External Maintenance Bypass Facility	Y/N	Yes	
2.11	Input Transformer	-	No	
2.12	Rectifier Devices	-	Mosfet	
2.13	Inverter Devices	-	IGBT	
2.14	Output Transformer	Y/N	No	
2.15	PWM Frequency	Hz	Vendor to confirm >>	
2.16	Supply Configuration	-	3 Phase, 4 Wire (i.e. 3 Pole + unswitched neutral)	
2.17	Neutral Rating	%	≥ 100% phase conductor	
2.18	Earthing Arrangement	-	TN-S	
3.00	**UPS Modes of Operation**			
3.01	Dynamic Output Classification (BS EN 62040-3)	-	111	
3.02	Primary mode of operation:	-	VFI (Double Online)	
3.03	VFI	Y/N	Yes (Default)	
3.04	VFD	-	Mode available but not enabled.	
3.05	VI	Y/N	Mode available but not enabled.	
3.06	Other (e.g., eco-mode, VMMS, line interactive etc)	-	Vendor to confirm >>	
3.07	Multi-module Parallel Synchronisation	Y/N	Yes	
3.08	Multi-module Parallel load sharing	Y/N	Yes	
3.09	Temperature Compensated Charging	Y/N	Yes	
4.00	**Input Characteristics**			
4.01	Input Power Factor at Full Load (rectifier path)	pf	>0,99 lagging	
4.02	Maximum Input Current at Full Load and Maximum Charging All Output Power Factors (0.8 lead to 0.8 lag)	A	Amps at nominal input voltage, Vendor to confirm >>	
4.03	Input Charging Current	%	5%, adjustable under different operations (i.e. generator supply)	
4.04	Rectifier Input Current Harmonic Distortion (THDi)	%	<3,5 (from 40% to 100% load)	
4.05	Nominal Mains Supply Voltage - steady state	V ±%	230 / 400V ±10%	
4.06	Nominal Mains Supply Voltage - transient	V ±%	230 / 400V ±15%	
4.07	Nominal Mains Supply Frequency	Hz ±%	50Hz ±5%	
4.08	Rectifier DC Ripple Voltage-float charge	%	Vendor to confirm >>	
4.09	Rectifier DC Ripple Voltage-boost charge	%	Vendor to confirm >>	
4.10	Adjustable Walk-in Period (from/to)	seconds	Vendor to confirm >>	
4.11	Rectifier Walk-in Period Default Value	seconds	Vendor to confirm >>	
4.12	Rectifier Rectifier No-load Inrush Current	A	Vendor to confirm >>	
4.13	Rectifier Rectifier No-load Inrush Current time constant	seconds	Vendor to confirm >>	
5.00	**Output Characteristics**			
5.01	Filter configuration / type	-	IGBT	
5.02	Steady State Voltage Control	V ±%	400V ±1%	
5.03	Steady State Frequency Control	Hz ±%	50Hz ±1%	
5.04	Rate Of Change of Frequency (slew rate - dF/dt)	Hz/s	< 1	
5.05	Dynamic Voltage Control (50% load step)	%	±5	
5.06	Dynamic Voltage Control (100% load step)	%	±10	
5.07	Transient Voltage Recovery Time From 100% Load Step	ms	≤20	
5.08	Inverter Output Harmonic Distortion (THDv) @ 100% linear load	%	< 2	
5.09	Inverter Output Harmonic Distortion (THDv) @ 100% Non-linear load	%	< 5	
5.10	Crest Factor (Peak/RMS)	-	< 3:1	
5.11	Load Power Factor Range @ full system rating	-	0,8 lag - 0,8 lead (Vendor to declare de-rating, if any, at 0,8 lag - 0,8 lead range)	
5.12	Minimum overload Capacity (@ ≥ 25°C Ambient) 110%	minutes	Continuous	
5.13	125%	seconds	> 300	
5.14	150%	seconds	> 40	
5.15	Minimum Short Circuit Capability	%In@ms	> 200% for 10ms (minimum)	
5.16	Minimum I2T Bypass Capability	-	Vendor to confirm >>	

Client:	STACK INFRASTRUCTURE
Project:	MIL07
Document:	OFCI Specification - Power Module
Doc ID:	MIL07-DBA-XX-XX-SP-E-60001
Date:	07/11/2025
Revision:	P01

IT UPS							
Item	**Description**		**Units**	**Engineer Specifies**	**Vendor Proposes**		
6.00	**Losses & Efficiencies at Unity Power Factor**						
6.01					VFI	VI	VFD
6.02	Losses @ Percentage Load:	0%	KW	Vendor to confirm >>			
6.03		25%	KW	Vendor to confirm >>			
6.04		40%	KW	Vendor to confirm >>			
6.05		50%	KW	Vendor to confirm >>			
6.06		75%	KW	Vendor to confirm >>			
6.07		100%	KW	Vendor to confirm >>			
6.08		Full charge	KW	Vendor to confirm >>			
6.09	Efficiencies @ Percentage Load:	25%	%	>96%			
6.10		40%	%	>96%			
6.11		50%	%	>96%			
6.12		75%	%	>96%			
6.13		100%	%	>96%			
6.14	Efficiencies (Curves / Calculation)	5%	%	Vendor to confirm >>			
6.15	Percentage Load:	10%	%	Vendor to confirm >>			
6.16		15%	%	Vendor to confirm >>			
6.17		20%	%	Vendor to confirm >>			
7.00	**Losses & Efficiencies at 0,95 Leading Power Factor**						
7.01					VFI	VI	VFD
7.02	Losses @ Percentage Load:	0%	KW	Vendor to confirm >>			
7.03		25%	KW	Vendor to confirm >>			
7.04		40%	KW	Vendor to confirm >>			
7.05		50%	KW	Vendor to confirm >>			
7.06		75%	KW	Vendor to confirm >>			
7.07		100%	KW	Vendor to confirm >>			
7.08		Full charge	KW	Vendor to confirm >>			
7.09	Efficiencies @ Percentage Load:	25%	%	Vendor to confirm >>			
7.10		40%	%	Vendor to confirm >>			
7.11		50%	%	Vendor to confirm >>			
7.12		75%	%	Vendor to confirm >>			
7.13		100%	%	Vendor to confirm >>			
7.14	Efficiencies (Curves / Calculation)	5%	%	Vendor to confirm >>			
7.15	@Percentage Load:	10%	%	Vendor to confirm >>			
7.16		15%	%	Vendor to confirm >>			
7.17		20%	%	Vendor to confirm >>			
8.00	**UPS Room Environment**						
8.01	Ambient Temperature		°C	35			
8.02		Max for 8hr in any 24hr	°C	40 (Vendor to declare derating if applicable)			
8.03		Minimum	°C	10			
8.04	Supply Air Fed From High/Low Level		-	front In from CRAHs			
8.05	UPS Air Inlet / Outlet Arrangement (e.g, Front in, top out)		-	Front in, top out			
8.06	Humidity Control		-	None Provided			
8.07	Degree of Protection (minimum)		-	IP20			
8.08	Installation Altitude		m	< 1000			
8.09	Pollution degree (IEC 60664-1)		-	2			
8.10	Maximum Noise Output – Per UPS Unit		-	< 79 dB(A) at 1 metre			
8.11	Full Load Heat Loss (Provide Worst Case)		kW	<38 kW per 1000 kW			
8.12	CRAH Unit Specification			Refer to Power Module CRAH Data sheet			
9.00	**Component Durability**						
9.01	UPS Module Mean Time Between Failures – MTBF		-	Vendor to confirm >>			
9.02	UPS Module Mean Time To Repair - MTTR		-	Vendor to confirm >>			
9.03	Expected Minimum Equipment Life (assuming recommended maintenance is undertaken)		-	15 years			
10.00	**Incoming / Outgoing Power Circuit Entry / Exit**						
10.01	Minimum UPS Supply Breaker / Fuse Rating		A	Vendor to confirm >>			
10.02	UPS Incoming UPS AC Cabling		-	Top entry busbar			
10.03	Single or Dual Supply Connection (main and bypass)		-	Single Supply			
10.04	Outgoing UPS AC Cabling		-	Top exit busbar			
10.05	Incoming / Outgoing UPS DC Cabling		-	Top entry			
10.06	Incoming External Automatic Bypass Switch		-	n/a			
10.07	Outgoing External Automatic Bypass Switch		-	n/a			
11.00	**Auxiliary**						
11.01	Internal Control Wiring		-	Dual sourced power supplies for control, instrumentation			
11.02	Status Monitoring		-	Serial ports and volt-free			
11.03	Comms cards		-	Additional comms cards			
11.04	Castell		-	Electronic Castell interlocking			

Client:	STACK INFRASTRUCTURE
Project:	MIL07
Document:	OFCI Specification - Power Module
Doc ID:	MIL07-DBA-XX-XX-SP-E-60001
Date:	07/11/2025
Revision:	P01

IT UPS					
Item	**Description**		**Units**	**Engineer Specifies**	**Vendor Proposes**
12.00	**Dimensions**				
12.01	UPS module (incl. cable box if required)	Length	mm	Vendor to confirm >>	
12.02		Height	mm	Vendor to confirm >>	
12.03		Depth	mm	Vendor to confirm >>	
12.04		Weight	kg	Vendor to confirm >>	
12.05	UPS System (incl. cable box if required)	Length	mm	Vendor to confirm >>	
12.06		Height	mm	Vendor to confirm >>	
12.07		Depth	mm	Vendor to confirm >>	
12.08		Weight	kg	Vendor to confirm >>	
12.09	External Automatic SBS	Length	mm	N/A	N/A
12.10		Height	mm	N/A	N/A
12.11		Depth	mm	N/A	N/A
12.12		Weight	kg	N/A	N/A
13.00	**Structural Constraints**				
13.01	Base frame structural requirements				
13.02	Structural loading - maximum uniform distributed load			Vendor to confirm >>	
13.03	Structural loading - maximum point load			Vendor to confirm >>	
14.00	**Batteries**				
14.01	Refer to Separate Battery Data Sheet		-	N/A	N/A
15.00	**Other**				
15.01	UPS Lead Time (including FAT)		weeks	Vendor to confirm >>	
15.02	Packing and Transport to Site		weeks	Vendor to confirm >>	
15.03	Installation and precommissioning (stage 1)		weeks	Vendor to confirm >>	
15.04	SAT period (stage 1)		weeks	Vendor to confirm >>	

Client:	STACK INFRASTRUCTURE
Project:	MIL07
Document:	OFCI Specification - Power Module
Doc ID:	MIL07-DBA-XX-XX-SP-E-60001
Date:	07/11/2025
Revision:	P01

MECH UPS					
Item	**Description**		**Units**	**Engineer Specifies**	**Vendor Proposes**
1.00	**General Information**				
1.01	Site		-	Milano, Siziano	
1.02	System(s)		-	IT UPS Systems	
1.03	Equipment reference(s):		-		
1.04	Location		-	Primary Critical & Reserve Module Switchrooms	
1.05	Manufacturing location		-	Vendor to confirm >>	
1.06	FAT Location		-	Vendor to confirm >>	
2.00	**General Characteristics**				
2.01	Number of units day ultimate			1x300kW UPS per 6 nr. PCS & 1 nr. RCS	
2.02	Number of units day 1			Refer to Drawings	
2.03	UPS Modules per System		-	Vendor to confirm >>	
2.04	Sub-modules per UPS Module		-	Vendor to confirm >>	
2.05	System Rating		kVA/kW	316kVA / 300 kW	
2.06	Module Rating		kVA/kW	Vendor to confirm >>	
2.07	Sub-module Rating		kVA/kW	Vendor to confirm >>	
2.08	Internal Bypass		Y/N	Yes	
2.09	External Automatic Bypass Switch		Y/N	No	
2.10	External Maintenance Bypass Facility		Y/N	Yes	
2.11	Input Transformer		-	No	
2.12	Rectifier Devices		-	Mosfet	
2.13	Inverter Devices		-	IGBT	
2.14	Output Transformer		Y/N	No	
2.15	PWM Frequency		Hz	Vendor to confirm >>	
2.16	Supply Configuration		-	3 Phase, 4 Wire (i.e. 3 Pole + unswitched neutral)	
2.17	Neutral Rating		%	≥ 100% phase conductor	
2.18	Earthing Arrangement		-	TN-S	
3.00	**UPS Modes of Operation**				
3.01	Dynamic Output Classification (BS EN 62040-3)		-	111	
3.02	Primary mode of operation:		-	VFI (Double Online)	
3.03	VFI		Y/N	Yes (Default)	
3.04	VFD		-	Mode available but not enabled.	
3.05	VI		Y/N	Mode available but not enabled.	
3.06	Other (e.g., eco-mode, VMMS, line interactive etc)		-	Vendor to confirm >>	
3.07	Multi-module Parallel Synchronisation		Y/N	Yes	
3.08	Multi-module Parallel load sharing		Y/N	Yes	
3.09	Temperature Compensated Charging		Y/N	Yes	
4.00	**Input Characteristics**				
4.01	Input Power Factor at Full Load (rectifier path)		pf	>0,99 lagging	
4.02	Maximum Input Current at Full Load and Maximum Charging All Output Power Factors (0.8 lead to 0.8 lag)		A	Amps at nominal input voltage, Vendor to confirm >>	
4.03	Input Charging Current		%	5%, adjustable under different operations (i.e. generator supply)	
4.04	Rectifier Input Current Harmonic Distortion (THDi)		%	<3,5 (from 40% to 100% load)	
4.05	Nominal Mains Supply Voltage - steady state		V ±%	230 / 400V ±10%	
4.06	Nominal Mains Supply Voltage - transient		V ±%	230 / 400V ±15%	
4.07	Nominal Mains Supply Frequency		Hz ±%	50Hz ±5%	
4.08	Rectifier DC Ripple Voltage-float charge		%	Vendor to confirm >>	
4.09	Rectifier DC Ripple Voltage-boost charge		%	Vendor to confirm >>	
4.10	Adjustable Walk-in Period (from/to)		seconds	Vendor to confirm >>	
4.11	Rectifier Walk-in Period Default Value		seconds	Vendor to confirm >>	
4.12	Rectifier Rectifier No-load Inrush Current		A	Vendor to confirm >>	
4.13	Rectifier Rectifier No-load Inrush Current time constant		seconds	Vendor to confirm >>	
5.00	**Output Characteristics**				
5.01	Filter configuration / type		-	IGBT	
5.02	Steady State Voltage Control		V ±%	400V ±1%	
5.03	Steady State Frequency Control		Hz ±%	50Hz ±1%	
5.04	Rate Of Change of Frequency (slew rate - dF/dt)		Hz/s	< 1	
5.05	Dynamic Voltage Control (50% load step)		%	±5	
5.06	Dynamic Voltage Control (100% load step)		%	±10	
5.07	Transient Voltage Recovery Time From 100% Load Step		ms	≤20	
5.08	Inverter Output Harmonic Distortion (THDv) @ 100% linear load		%	< 2	
5.09	Inverter Output Harmonic Distortion (THDv) @ 100% Non-linear		%	< 5	
5.10	Crest Factor (Peak/RMS)		-	< 3:1	
5.11	Load Power Factor Range @ full system rating		-	0,8 lag - 0,8 lead (Vendor to declare de-rating, if any, at 0,8 lag - 0,8 lead range)	
5.12	Minimum overload Capacity (@ ≥ 25°C Ambient) 110%		minutes	Continuous	
5.13	125%		seconds	> 30	
5.14	150%		seconds	> 10	
5.15	Minimum Short Circuit Capability		%In@ms	> 200% for 10ms (minimum)	
5.16	Minimum I2T Bypass Capability		-	Vendor to confirm >>	

Client:	STACK INFRASTRUCTURE
Project:	MIL07
Document:	OFCI Specification - Power Module
Doc ID:	MIL07-DBA-XX-XX-SP-E-60001
Date:	07/11/2025
Revision:	P01

MECH UPS							
Item	**Description**		**Units**	**Engineer Specifies**	**Vendor Proposes**		
6.00	**Losses & Efficiencies at Unity Power Factor**						
6.01					VFI	VI	VFD
6.02	Losses @ Percentage Load:	0%	KW	Vendor to confirm >>			
6.03		25%	KW	Vendor to confirm >>			
6.04		40%	KW	Vendor to confirm >>			
6.05		50%	KW	Vendor to confirm >>			
6.06		75%	KW	Vendor to confirm >>			
6.07		100%	KW	Vendor to confirm >>			
6.08		Full charge	KW	Vendor to confirm >>			
6.09	Efficiencies @ Percentage Load:	25%	%	>96%			
6.10		40%	%	>96%			
6.11		50%	%	>96%			
6.12		75%	%	>96%			
6.13		100%	%	>96%			
6.14	Efficiencies (Curves / Calculation)	5%	%	Vendor to confirm >>			
6.15	Percentage Load:	10%	%	Vendor to confirm >>			
6.16		15%	%	Vendor to confirm >>			
6.17		20%	%	Vendor to confirm >>			
7.00	**Losses & Efficiencies at 0,95 Leading Power Factor**						
7.01					VFI	VI	VFD
7.02	Losses @ Percentage Load:	0%	KW	Vendor to confirm >>			
7.03		25%	KW	Vendor to confirm >>			
7.04		40%	KW	Vendor to confirm >>			
7.05		50%	KW	Vendor to confirm >>			
7.06		75%	KW	Vendor to confirm >>			
7.07		100%	KW	Vendor to confirm >>			
7.08		Full charge	KW	Vendor to confirm >>			
7.09	Efficiencies @ Percentage Load:	25%	%	Vendor to confirm >>			
7.10		40%	%	Vendor to confirm >>			
7.11		50%	%	Vendor to confirm >>			
7.12		75%	%	Vendor to confirm >>			
7.13		100%	%	Vendor to confirm >>			
7.14	Efficiencies (Curves / Calculation)	5%	%	Vendor to confirm >>			
7.15	@Percentage Load:	10%	%	Vendor to confirm >>			
7.16		15%	%	Vendor to confirm >>			
7.17		20%	%	Vendor to confirm >>			
8.00	**UPS Room Environment**						
8.01	Ambient Temperature		°C	30			
8.02		Max for 8hr in any 24hr	°C	40 (Vendor to declare derating if applicable)			
8.03		Minimum	°C	10			
8.04	Supply Air Fed From High/Low Level		-	front In from CRAHs			
8.05	UPS Air Inlet / Outlet Arrangement (e.g, Front in, top out)		-	Front in, top out			
8.06	Humidity Control		-	None Provided			
8.07	Degree of Protection (minimum)		-	IP20			
8.08	Installation Altitude		m	< 1000			
8.09	Pollution degree (IEC 60664-1)		-	2			
8.10	Maximum Noise Output – Per UPS Unit		-	< 70 dB(A) at 1 metre			
8.11	Full Load Heat Loss (Provide Worst Case)		kW	<12 kW per 300 kW			
8.12	CRAH Unit Specification			Refer to Power Module CRAH Data sheet			
9.00	**Component Durability**						
9.01	UPS Module Mean Time Between Failures – MTBF		-	Vendor to confirm >>			
9.02	UPS Module Mean Time To Repair - MTTR		-	Vendor to confirm >>			
9.03	Expected Minimum Equipment Life (assuming recommended maintenance is undertaken)		-	15 years			
10.00	**Incoming / Outgoing Power Circuit Entry / Exit**						
10.01	Minimum UPS Supply Breaker / Fuse Rating		A	Vendor to confirm >>			
10.02	UPS Incoming UPS AC Cabling		-	Top entry cable			
10.03	Single or Dual Supply Connection (main and bypass)		-	Single Supply			
10.04	Outgoing UPS AC Cabling		-	Top exit cable			
10.05	Incoming / Outgoing UPS DC Cabling		-	Top entry			
10.06	Incoming External Automatic Bypass Switch		-	n/a			
10.07	Outgoing External Automatic Bypass Switch		-	n/a			
11.00	**Auxiliary**						
11.01	Internal Control Wiring		-	Dual sourced power supplies for control, instrumentation			
11.02	Status Monitoring		-	Serial ports and volt-free			
11.03	Comms cards		-	Additional comms cards			
11.04	Castell		-	Electronic Castell interlocking			

Client:	STACK INFRASTRUCTURE
Project:	MIL07
Document:	OFCI Specification - Power Module
Doc ID:	MIL07-DBA-XX-XX-SP-E-60001
Date:	07/11/2025
Revision:	P01

MECH UPS					
Item	**Description**		**Units**	**Engineer Specifies**	**Vendor Proposes**
12.00	**Dimensions**				
12.01	UPS module (incl. cable box if required)	Length	mm	Vendor to confirm >>	
12.02		Height	mm	Vendor to confirm >>	
12.03		Depth	mm	Vendor to confirm >>	
12.04		Weight	kg	Vendor to confirm >>	
12.05	UPS System (incl. cable box if required)	Length	mm	Vendor to confirm >>	
12.06		Height	mm	Vendor to confirm >>	
12.07		Depth	mm	Vendor to confirm >>	
12.08		Weight	kg	Vendor to confirm >>	
12.09	External Automatic SBS	Length	mm	N/A	N/A
12.10		Height	mm	N/A	N/A
12.11		Depth	mm	N/A	N/A
12.12		Weight	kg	N/A	N/A
13.00	**Structural Constraints**				
13.01	Base frame structural requirements				
13.02	Structural loading - maximum uniform distributed load			Vendor to confirm >>	
13.03	Structural loading - maximum point load			Vendor to confirm >>	
14.00	**Batteries**				
14.01	Refer to Separate Battery Data Sheet		-	N/A	N/A
15.00	**Other**				
15.01	UPS Lead Time (including FAT)		weeks	Vendor to confirm >>	
15.02	Packing and Transport to Site		weeks	Vendor to confirm >>	
15.03	Installation and precommissioning (stage 1)		weeks	Vendor to confirm >>	
15.04	SAT period (stage 1)		weeks	Vendor to confirm >>	

Client:	STACK INFRASTRUCTURE
Project:	MIL07
Document:	OFCI Specification - Power Module
Doc ID:	MIL07-DBA-XX-XX-SP-E-60001
Date:	07/11/2025
Revision:	P01

HOUSELOAD UPS					
Item	**Description**		**Units**	**Engineer Specifies**	**Vendor Proposes**
1.00	**General Information**				
1.01	Site		-	Milano, Siziano	
1.02	System(s)		-	IT UPS Systems	
1.03	Equipment reference(s):		-		
1.04	Location		-	Houseload POD	
1.05	Manufacturing location		-	Vendor to confirm >>	
1.06	FAT Location		-	Vendor to confirm >>	
2.00	**General Characteristics**				
2.01	Number of units day ultimate			1x300kW UPS	
2.02	Number of units day 1			Refer to Drawings	
2.03	UPS Modules per System		-	Vendor to confirm >>	
2.04	Sub-modules per UPS Module		-	Vendor to confirm >>	
2.05	System Rating		kVA/kW	316kVA / 300 kW	
2.06	Module Rating		kVA/kW	Vendor to confirm >>	
2.07	Sub-module Rating		kVA/kW	Vendor to confirm >>	
2.08	Internal Bypass		Y/N	Yes	
2.09	External Automatic Bypass Switch		Y/N	No	
2.10	External Maintenance Bypass Facility		Y/N	Yes	
2.11	Input Transformer		-	No	
2.12	Rectifier Devices		-	Mosfet	
2.13	Inverter Devices		-	IGBT	
2.14	Output Transformer		Y/N	No	
2.15	PWM Frequency		Hz	Vendor to confirm >>	
2.16	Supply Configuration		-	Single Input, 3 Phase, 4 Wire (i.e. 3 Pole + unswitched neutral)	
2.17	Neutral Rating		%	≥ 100% phase conductor	
2.18	Earthing Arrangement		-	TN-S	
3.00	**UPS Modes of Operation**				
3.01	Dynamic Output Classification (BS EN 62040-3)		-	111	
3.02	Primary mode of operation:		-	VFI (Double Online)	
3.03	VFI		Y/N	Yes (Default)	
3.04	VFD		-	Mode available but not enabled.	
3.05	VI		Y/N	Mode available but not enabled.	
3.06	Other (e.g., eco-mode, VMMS, line interactive etc)		-	Vendor to confirm >>	
3.07	Multi-module Parallel Synchronisation		Y/N	Yes	
3.08	Multi-module Parallel load sharing		Y/N	Yes	
3.09	Temperature Compensated Charging		Y/N	Yes	
3.10					
4.00	**Input Characteristics**				
4.01	Input Power Factor at Full Load (rectifier path)		pf	>0,99 lagging	
4.02	Maximum Input Current at Full Load and Maximum Charging All Output Power Factors (0.8 lead to 0.8 lag)		A	Amps at nominal input voltage, Vendor to confirm >>	
4.03	Input Charging Current		%	5%, adjustable under different operations (i.e. generator supply)	
4.04	Rectifier Input Current Harmonic Distortion (THDi)		%	<3,5 (from 40% to 100% load)	
4.05	Nominal Mains Supply Voltage - steady state		V ±%	230 / 400V ±10%	
4.06	Nominal Mains Supply Voltage - transient		V ±%	230 / 400V ±15%	
4.07	Nominal Mains Supply Frequency		Hz ±%	50Hz ±5%	
4.08	Rectifier DC Ripple Voltage-float charge		%	Vendor to confirm >>	
4.09	Rectifier DC Ripple Voltage-boost charge		%	Vendor to confirm >>	
4.10	Adjustable Walk-in Period (from/to)		seconds	Vendor to confirm >>	
4.11	Rectifier Walk-in Period Default Value		seconds	Vendor to confirm >>	
4.12	Rectifier Rectifier No-load Inrush Current		A	Vendor to confirm >>	
4.13	Rectifier Rectifier No-load Inrush Current time constant		seconds	Vendor to confirm >>	
5.00	**Output Characteristics**				
5.01	Filter configuration / type		-	IGBT	
5.02	Steady State Voltage Control		V ±%	400V ±1%	
5.03	Steady State Frequency Control		Hz ±%	50Hz ±1%	
5.04	Rate Of Change of Frequency (slew rate - dF/dt)		Hz/s	< 1	
5.05	Dynamic Voltage Control (50% load step)		%	±5	
5.06	Dynamic Voltage Control (100% load step)		%	±10	
5.07	Transient Voltage Recovery Time From 100% Load Step		ms	≤20	
5.08	Inverter Output Harmonic Distortion (THDv) @ 100% linear load		%	< 2	
5.09	Inverter Output Harmonic Distortion (THDv) @ 100% Non-linear		%	< 5	
5.10	Crest Factor (Peak/RMS)		-	< 3:1	
5.11	Load Power Factor Range @ full system rating		-	0,8 lag - 0,8 lead (Vendor to declare de-rating, if any, at 0,8 lag - 0,8 lead range)	
5.12	Minimum overload Capacity (@ ≥ 25°C Ambient) 110%		minutes	Continuous	
5.13	125%		seconds	> 30	
5.14	150%		seconds	> 10	
5.15	Minimum Short Circuit Capability		%In@ms	> 200% for 10ms (minimum)	
5.16	Minimum I2T Bypass Capability		-	Vendor to confirm >>	

Client:	STACK INFRASTRUCTURE
Project:	MIL07
Document:	OFCI Specification - Power Module
Doc ID:	MIL07-DBA-XX-XX-SP-E-60001
Date:	07/11/2025
Revision:	P01

HOUSELOAD UPS							
Item	**Description**		**Units**	**Engineer Specifies**	**Vendor Proposes**		
6.00	**Losses & Efficiencies at Unity Power Factor**						
6.01					VFI	VI	VFD
6.02	Losses @ Percentage Load:	0%	KW	Vendor to confirm >>			
6.03		25%	KW	Vendor to confirm >>			
6.04		40%	KW	Vendor to confirm >>			
6.05		50%	KW	Vendor to confirm >>			
6.06		75%	KW	Vendor to confirm >>			
6.07		100%	KW	Vendor to confirm >>			
6.08		Full charge	KW	Vendor to confirm >>			
6.09	Efficiencies @ Percentage Load:	25%	%	>96%			
6.10		40%	%	>96%			
6.11		50%	%	>96%			
6.12		75%	%	>96%			
6.13		100%	%	>96%			
6.14	Efficiencies (Curves / Calculation)	5%	%	Vendor to confirm >>			
6.15	Percentage Load:	10%	%	Vendor to confirm >>			
6.16		15%	%	Vendor to confirm >>			
6.17		20%	%	Vendor to confirm >>			
7.00	**Losses & Efficiencies at 0,95 Leading Power Factor**						
7.01					VFI	VI	VFD
7.02	Losses @ Percentage Load:	0%	KW	Vendor to confirm >>			
7.03		25%	KW	Vendor to confirm >>			
7.04		40%	KW	Vendor to confirm >>			
7.05		50%	KW	Vendor to confirm >>			
7.06		75%	KW	Vendor to confirm >>			
7.07		100%	KW	Vendor to confirm >>			
7.08		Full charge	KW	Vendor to confirm >>			
7.09	Efficiencies @ Percentage Load:	25%	%	Vendor to confirm >>			
7.10		40%	%	Vendor to confirm >>			
7.11		50%	%	Vendor to confirm >>			
7.12		75%	%	Vendor to confirm >>			
7.13		100%	%	Vendor to confirm >>			
7.14	Efficiencies (Curves / Calculation)	5%	%	Vendor to confirm >>			
7.15	@Percentage Load:	10%	%	Vendor to confirm >>			
7.16		15%	%	Vendor to confirm >>			
7.17		20%	%	Vendor to confirm >>			
8.00	**UPS Room Environment**						
8.01	Ambient Temperature		°C	35			
8.02		Max for 8hr in any 24hr	°C	40 (Vendor to declare derating if applicable)			
8.03		Minimum	°C	10			
8.04	Supply Air Fed From High/Low Level		-	front In from CRAHs			
8.05	UPS Air Inlet / Outlet Arrangement (e.g, Front in, top out)		-	Front in, top out			
8.06	Humidity Control		-	None Provided			
8.07	Degree of Protection (minimum)		-	IP20			
8.08	Installation Altitude		m	< 1000			
8.09	Pollution degree (IEC 60664-1)		-	2			
8.10	Maximum Noise Output – Per UPS Unit		-	< 65 dB(A) at 1 metre			
8.11	Full Load Heat Loss (Provide Worst Case)		kW	<12 kW per 300 kW			
8.12	CRAH Unit Specification			Refer to Power Module CRAH Data sheet			
9.00	**Component Durability**						
9.01	UPS Module Mean Time Between Failures – MTBF		-	Vendor to confirm >>			
9.02	UPS Module Mean Time To Repair - MTTR		-	Vendor to confirm >>			
9.03	Expected Minimum Equipment Life (assuming recommended maintenance is undertaken)		-	15 years			
10.00	**Incoming / Outgoing Power Circuit Entry / Exit**						
10.01	Minimum UPS Supply Breaker / Fuse Rating		A	Vendor to confirm >>			
10.02	UPS Incoming UPS AC Cabling		-	Top entry cable			
10.03	Single or Dual Supply Connection (main and bypass)		-	Single Supply			
10.04	Outgoing UPS AC Cabling		-	Top exit cable			
10.05	Incoming / Outgoing UPS DC Cabling		-	Top entry			
10.06	Incoming External Automatic Bypass Switch		-	n/a			
10.07	Outgoing External Automatic Bypass Switch		-	n/a			

Client:	STACK INFRASTRUCTURE
Project:	MIL07
Document:	OFCI Specification - Power Module
Doc ID:	MIL07-DBA-XX-XX-SP-E-60001
Date:	07/11/2025
Revision:	P01

HOUSELOAD UPS					
Item	**Description**		**Units**	**Engineer Specifies**	**Vendor Proposes**
11.00	**Auxiliary**				
11.01	Internal Control Wiring		-	Dual sourced power supplies for control, instrumentation	
11.02	Status Monitoring		-	Serial ports and volt-free	
11.03	Comms cards		-	Additional comms cards	
11.04	Castell		-	Electronic Castell interlocking	
12.00	**Dimensions**				
12.01	UPS module (incl. cable box if required)	Length	mm	Vendor to confirm >>	
12.02		Height	mm	Vendor to confirm >>	
12.03		Depth	mm	Vendor to confirm >>	
12.04		Weight	kg	Vendor to confirm >>	
12.05	UPS System (incl. cable box if required)	Length	mm	Vendor to confirm >>	
12.06		Height	mm	Vendor to confirm >>	
12.07		Depth	mm	Vendor to confirm >>	
12.08		Weight	kg	Vendor to confirm >>	
12.09	External Automatic SBS	Length	mm	N/A	N/A
12.10		Height	mm	N/A	N/A
12.11		Depth	mm	N/A	N/A
12.12		Weight	kg	N/A	N/A
13.00	**Structural Constraints**				
13.01	Base frame structural requirements				
13.02	Structural loading - maximum uniform distributed load			Vendor to confirm >>	
13.03	Structural loading - maximum point load			Vendor to confirm >>	
14.00	**Batteries**				
14.01	Refer to Separate Battery Data Sheet		-	N/A	N/A
15.00	**Other**			-	
15.01	UPS Lead Time (including FAT)		weeks	Vendor to confirm >>	
15.02	Packing and Transport to Site		weeks	Vendor to confirm >>	
15.03	Installation and precommissioning (stage 1)		weeks	Vendor to confirm >>	
15.04	SAT period (stage 1)		weeks	Vendor to confirm >>	

Client:	STACK INFRASTRUCTURE
Project:	MIL07
Document:	OFCI Specification - Power Module
Doc ID:	MIL07-DBA-XX-XX-SP-E-60001
Date:	07/11/2025
Revision:	P01

UPS BATTERIES LI-ION				
Item	**Description**	**Units**	**Engineer Specifies**	**Vendor Proposes**
1.00	**General Information**			
1.01	Site:	-	Milano, Siziano	
1.02	System:	-	IT UPS Systems	
1.03	Equipment reference(s):	-		
1.04	Location:	-	IT Battery Rooms	
2.00	**Batteries**			
2.01	Battery Type	-	Lithium Ion	
2.02	Manufacturer	-	Vendor to confirm >>	
2.03	Battery Product Range	-	Vendor to confirm >>	
2.04	Battery Product Number	-	Vendor to confirm >>	
2.05	Does Battery Conform to BS 6290 Part 4	-	Vendor to confirm >>	
2.06	Design Life of Battery (at 23 +/- 5°C and full load)	years	≥ 14	
2.07	Battery System Autonomy (@ End of life and full load)	mins	5 for the IT load 8 for the ITM load	
2.08	Aging Factor Applied To Battery Autonomy	%	Vendor to confirm >>	
2.09	Day 1 Battery System Autonomy	mins	5	
2.10	Load Supported by Battery (per UPS Unit)	kW	1000	
2.11	Number of Battery Strings Per UPS Unit	-	2 (minimum)	
2.12	Number of Cells per Module	-	Vendor to confirm >>	
2.13	Number of Modules per String	-	Vendor to confirm >>	
2.14	Nominal Cell Voltage	V	Vendor to confirm >>	
2.15	Nominal Module Voltage	V	Vendor to confirm >>	
2.16	Cell Charged Voltage (@20°C)	V	Vendor to confirm >>	
2.17	Module Charged Voltage (@20°C)	V	Vendor to confirm >>	
2.18	String Charged Voltage (@20°C)	V	Vendor to confirm >>	
2.19	Cell Start Top-up Charge Voltage	V	Vendor to confirm >>	
2.20	Cell Overcharged Alarm	V	Vendor to confirm >>	
2.21	Cell Cut-off Voltage	V	Vendor to confirm >>	
2.22	Cell Over-discharged Voltage	V	Vendor to confirm >>	
2.23	Battery Capacity	Ah	Vendor to confirm >>	
2.24	Target Discharge Profile	-	C10	
2.25	Discharge Power @ 20°C To Cut-off Voltage (5 min rate)	W	Vendor to confirm >>	
2.26	Battery Terminal Position (e.g. Top, Front)	-	Vendor to confirm >>	
2.27	Battery Terminal Type	-	Vendor to confirm >>	
2.28	Individual Battery Dimensions (LxWxH)	mm	Vendor to confirm >>	
2.29	Individual Battery Weight	kg	Vendor to confirm >>	
3.00	**Battery Cabinets**			
3.01	Battery Cabinet Arrangement	-	Self-ventilated Steel Rack	
3.02	IP Rating	IPXX	IP20	
3.03	Cabinet Temperature Monitor	-	Yes	
3.04	Cabinet Temperature Monitor - H Alarm (warning)	°C	Vendor to confirm >>	
3.05	Cabinet Temperature Monitor - HH Alarm (shut down)	°C	Vendor to confirm >>	
3.06	Modules per Cabinet	-	Vendor to confirm >>	
3.07	Number of Cabinets per String	-	Vendor to confirm >>	
3.08	Number of Cabinets per UPS unit	-	Vendor to confirm >>	
3.09	Individual Cabinet Dimensions (LxWxH)	mm	Vendor to confirm >>	
3.10	Weight of Each Cabinet Fully Populated	kg	Vendor to confirm >>	
3.11	Point load	kN/m²	Vendor to confirm >>	
4.00	**Switchgear**			
4.01	DC Protective Device Type	-	Vendor to confirm >>	
4.02	DC Protective Device Rating	A	Vendor to confirm >>	
4.03	Battery String Isolation Type / Method	-	Vendor to confirm >>	
4.04	Weight per Unit	kg	Vendor to confirm >>	
4.05	Dimension per Unit	(L/H/D)	Vendor to confirm >>	
5.00	**Battery Room Environment**			
5.01	Dedicated Room	Y	Yes	
5.02	Design Cooling Condition	°C	25 +/- 1°C	
5.03	Maximum Battery Temperature Range Without Degrading	°C	Vendor to confirm >>	
5.04	Permitted Transport and Storage Temperature	°C	Vendor to confirm >>	
5.05	Humidity Control	-	None Provided	
5.06	Full Load Heat Loss (Provide Worst Case)	kW	< 2.65 kW	
5.07	Ventilation Requirements	-	Vendor to confirm >> based on minimum code requirements	
5.08	Cooling & Vent Redundancy	-	N+1	
6.00	**Structural Constraints**			
6.01	Base frame structural requirements	-	Vendor to confirm >>	
6.02	Structural loading - maximum uniform distributed load	-	Vendor to confirm >>	
6.03	Structural loading - maximum point load	-	Vendor to confirm >>	
7.00	**Deliveries**			
7.01	Ex-works	weeks	Vendor to confirm >>	
7.02	Packing and Transport to Site	weeks	Vendor to confirm >>	
7.03	Battery Build Time	weeks	Vendor to confirm >>	
8.00	**Warranty**			
8.01	Battery Warranty To Commence From Date Of Practical Completion.	Y/N	Vendor to confirm >>	

Client:	STACK INFRASTRUCTURE
Project:	MIL07
Document:	OFCI Specification - Power Module
Doc ID:	MIL07-DBA-XX-XX-SP-E-60001
Date:	07/11/2025
Revision:	P01

STATIC TRANSFER SWITCH					
Item	**Description**		**Units**	**Engineer Specifies**	**Vendor Proposes**
1.00	**General Information**				
1.01	Site		-	Milano, Siziano	
1.02	System		-	Static Transfer Switch	
1.03	Equipment reference(s):		-		
1.04	Location:		-	Primary Critical Module Switchrooms	
1.05	Manufacturing location		-	Vendor to confirm >>	
1.06	FAT Location		-	Vendor to confirm >>	
2.00	**General Characteristics**				
2.01	Number of units day ultimate		-	6nr. PCS, 2 nr. STS each	
2.02	Number of units day 1		-	Refer to Drawings	
2.03	Equipment Actual Rating: Day 1		A	1600A	
2.04	Equipment Actual Rating: Ultimate		A	1600A	
2.05	Module Continuous Rating (Minimum)		A	1600A	
2.06	Internal Bypass		Y/N	Yes	
2.07	Dual Internal Bypass (Primary and Reserve)		Y/N	Yes, with interblock between primary and secondary source	
2.08	Dual output switch (Primary and Reserve)		Y/N	No	
2.09	External Maintenance Bypass Facility		Y/N	No	
2.10	Input Transformer		Y/N	No	
2.11	Static Switch Technology		-	SCR	
2.12	Supply Configuration		3P/4P	4P	
2.13	Overlapping Neutral		Y/N	Yes	
2.14	Output Transformer		Y/N	No	
2.15	Incoming Connections		-		
2.16	Top or Bottom		-	Top	
2.17	Busbar or Cable		-	Busbar	
2.18	Outgoing Connection		-		
2.19	Top or Bottom		-	Top	
2.20	Busbar or Cable		-	Busbar	
2.21	Neutral Rating		%	≥ 100% phase conductor rating	
2.22	Earthing Arrangement		-	TN-S	
2.23	Out of sync transfer		Y/N	Y (up to 180°)	
2.24	Transfer speed		ms	CBEMA/ITIC Curve	
2.25	Micro-controller board			Redundant	
2.26	Electronic power supply			Dual redundant	
2.27	Indipendent SCR power supply			Redundant	
3.00	**Input Characteristics**				
3.01	Nominal Mains Supply Voltage - steady state		V ±%	230 / 400V ±10%	
3.02	Nominal Mains Supply Voltage - transient		V ±%	230 / 400V ±20%	
3.03	Nominal Mains Supply Frequency		Hz ±%	50Hz ±5%	
4.00	**Output Characteristics**				
4.01	Efficiency		%	>99.25	
4.02	Minimum overload Capacity (@ ≥ 25°C)	125%	s	> 600	
4.03		150%	s	> 60	
4.04		700%	s	> 10	
4.05		1000%	ms	> 250	
4.06	Minimum Short Circuit Capability		%In@ms	> 200% for 10ms (minimum)	
4.07	Minimum IT Bypass Capability		-	Vendor to confirm >>	
4.08	Efficiencies with breakers / switches closed?		Y/N	Y	
4.09	Heat rejection @ full load		kW	Vendor to confirm >>	
5.00	**Environment**				
5.01	Ambient Temperature	Maximum average	°C	40	
5.02		Minimum	°C	10	
5.03	Supply Air / Exhaust Air		-	Front air in (low) / Top Air Out	
5.04	Humidity Control		-		
5.05	Relative humidity		-	8% to 80%	
5.06	Minimum dew point		°C	17	
5.07	Degree of Protection (minimum)		-	IP20	
5.08	Installation Altitude		m	< 1000	
5.09	Pollution degree (IEC 60664-1)		-	2	
5.10	Maximum Noise Output		-	< 84 dB(A) at 1 metre	
5.11	CRAH Unit Specification		-	Refer to Power Module CRAH Data sheet	
6.00	**Component Durability**				
6.01	Module Mean Time Between Failures - MTBF		-	Vendor to confirm >>	
6.02	Module Mean Time To Repair - MTTR		-	Vendor to confirm >>	
6.03	Expected Minimum Equipment Life		-	15 years	
7.00	**Incoming / Outgoing Power Circuit Entry / Exit**				
7.01	Minimum Supply Breaker / Fuse Rating		A	Vendor to confirm >>	
7.02	Incoming Connection		-	Top entry busbar	
7.03	Outgoing Connection		-	Top exit busbar	
7.04	Incoming External Automatic Bypass Switch		-	n/a	
7.05	Outgoing External Automatic Bypass Switch		-	n/a	

Client:	STACK INFRASTRUCTURE
Project:	MIL07
Document:	OFCI Specification - Power Module
Doc ID:	MIL07-DBA-XX-XX-SP-E-60001
Date:	07/11/2025
Revision:	P01

STATIC TRANSFER SWITCH					
Item	**Description**		**Units**	**Engineer Specifies**	**Vendor Proposes**
8.00	**Auxiliary**				
8.01	Internal Control Wiring		-	Internal power supplies for control, instrumentation and fans	
8.02	Status Monitoring		-	Serial ports and volt-free contacts	
8.03	Comms cards		-	Additional comms cards required	
8.04	Castell		-	Electronic Castell interlocking	
8.05	Inhibit signal receive		Y/N	Y	
8.06	Meter on output		Y/N	Y (see EMS specification)	
8.07	Human Machine Interface		Y/N	Y	
9.00	**Maximum Dimensions**				
9.01	System (incl. cable or busbar box if required)	Length	mm	Vendor to confirm >>	
9.02		Height	mm	Vendor to confirm >>	
9.03		Depth	mm	Vendor to confirm >>	
9.04		Weight	kg	Vendor to confirm >>	
10.00	**Other**				
10.01	Lead Time (including FAT)		weeks	Vendor to confirm >>	
10.02	Packing and Transport to Site		weeks	Vendor to confirm >>	
10.03	Installation and precommissioning (stage 1)		weeks	Vendor to confirm >>	
10.04	Period (stage 1)		weeks	Vendor to confirm >>	

Legal Office:
DBA S.p.A.
Piazza Roma 19
32045, Santo Stefano di Cadore (BL)
Italy
+39 0422 693511
dbaprogetti@pec.dbagroup.it
www.dbagroup.it

Branch Office:
DBA S.p.A.
Via Natale Battaglia 10
20127, Milan
Italy
+39 0422 693511
dbaprogetti@pec.dbagroup.it
www.dbagroup.it

COMUNE DI SIZIANO

Principal: **STACK INFRASTRUCTURE**

Project:

MIL07

MIL07-DBA-XX-XX-SP-E-60002 **13038001**			Title: **OFCI Specification Generator**
PP0 - RIBA 3	**IES**	**60002**	
Prog.	**D. De Bettin** **S. Busetti**	**PM**	**A. Masiero**
BIMM	**S. Di Biase**	**BIMC**	**R. Sodano**

Rev	EDITED	CHECKED	APPROVED	DATE	DESCRIPTION
P01	D. TOFFALI	S. SONCINI	A. MASIERO	07/11/2025	S4 - Riba 3 Submittal

Client:	STACK INFRASTRUCTURE
Project:	MIL07
Document:	OFCI Specification - Generator
Doc ID:	MIL07-DBA-XX-XX-SP-E-60002
Date:	07/11/2025
Revision:	P01

CRITICAL GENERATOR

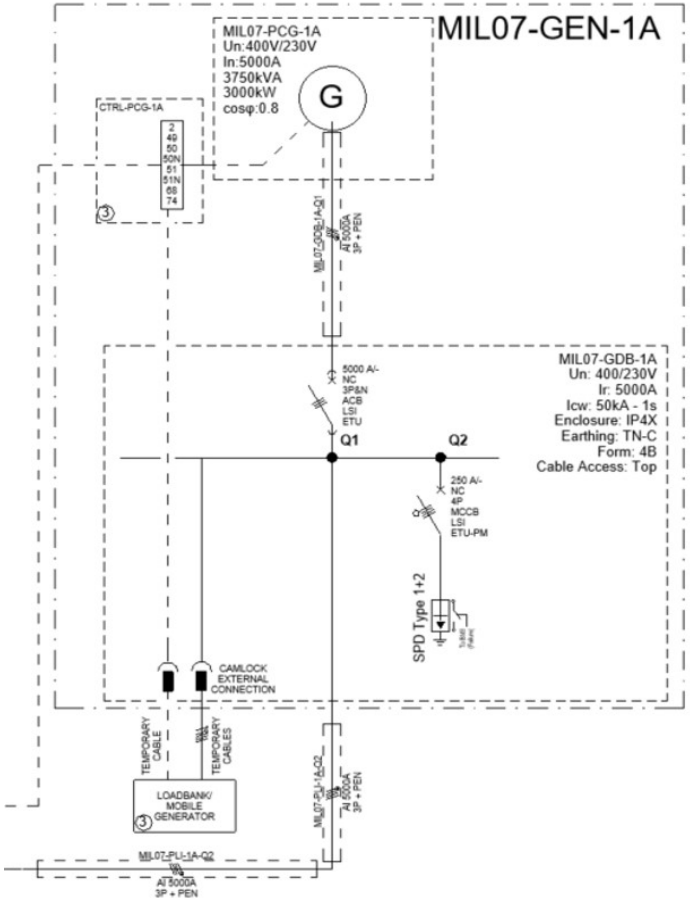

HOUSING GENERATOR

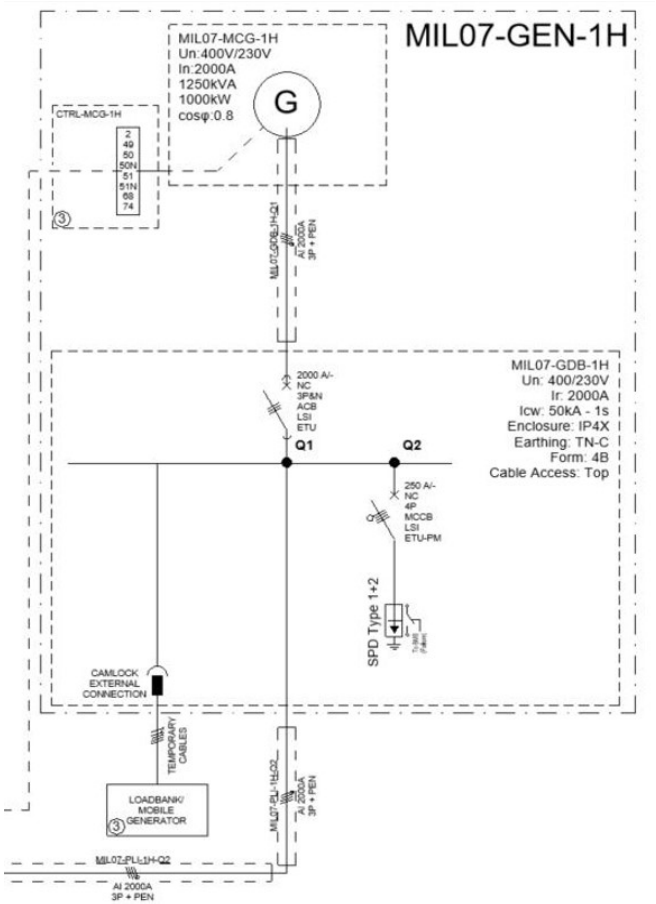

Client:	STACK INFRASTRUCTURE
Project:	MIL07
Document:	OFCI Specification - Generator
Doc ID:	MIL07-DBA-XX-XX-SP-E-60002
Date:	07/11/2025
Revision:	P01

3,0 MW, 400V, STANDBY GENERATOR				
Item	**Description**	**Units**	**Specifications**	**Vendor Proposal**
1.00	**General Criteria**			
1.01	Site	-	Milano - Siziano	
1.02	Total number of generators	-	7	
1.03	Day 1 number of generators	-	7	
1.04	Generator References	-	See Schematics	
1.05	Proposed Vendor	-		
2.00	**Manufacturing and FAT Details**			
2.01	Location of engine manufacture		Vendor to advise >	
2.02	Location of alternator manufacture		Vendor to advise »	
2.03	Location of fuel tank manufacture		Vendor to advise >	
2.04	Location of generator set assembly		Vendor to advise »	
2.05	Location of controls assembly		Vendor to advise »	
2.06	Location of project and design office		Vendor to advise >	
2.07	Location of FAT with load bank and controls		Vendor to advise »	
2.08	FAT load bank data (MW, MVA and power factor)		Vendor to advise >	
2.09	Maximum number of parallel sets at FAT		Vendor to advise »	
3.00	**Generator Set Criteria**			
3.01	Generator set rating / type (ISO 8528-1)	-	DCP	
3.02	Generator set rating (net)	MW	3,0	
3.03	Power factor	-	0.8 lagging - 0,9 leading	
3.04	Vibration criteria	-	Within ISO 8528-9 limits.	
3.05	Ambient operating temperatures	-		
3.06	Ashrae Weather Centre	years	N=20	
3.07	External incoming air temperature (dry bulb)	°C	40°C	
3.08	Internal room:	°C	NA	
3.09	Installation altitude	m	93 m above sea level	
3.10	Sound pressure level break out at 1m from all surfaces	dB(L_{PA})	75 dBA at external façade louvre.	
3.11	Engine Noise Output	dB(L_{PA})	Vendor to advise >	
3.12	Exhaust Noise Output	dB(L_{PA})	Vendor to advise >	
3.13	Air inlet at 1m	dB(L_{PA})	Vendor to advise >	
3.14	Air outlet at 1m	dB(L_{PA})	Vendor to advise >	
3.15	Seismic measures	-	Vendor to advise »	
3.16	Generator set controller type	-	Vendor to advise »	
3.17	Generator set controller model	-	Vendor to advise »	
4.00	**Auxiliary Supplies**			
4.01	Auxiliary electrical supply requirement	V/ph/Hz	400V/3ph/50	
4.02	Distribution boards		One per generator	
4.03	External ATS to auxiliary supply distribution board		No	
4.04	Auxiliary supply source		LV Power Module	
4.05	Auxiliary supply (off-load) electrical demand (i.e. controls, heater jacket, chargers, fuel pumps, lighting etc)	kW	Vendor to advise >	
5.00	**Diesel Engine**			
5.01	Diesel engine manufacturer	-	Vendor to advise >	
5.02	Diesel engine model	-	Vendor to advise >	
5.03	Optimisation	-	Emissions Optimised / BImSchV Regulation Diesel	
5.04	Governor Type	-	Isochronous electronic	
5.05	Governor Control Limits	-	Vendor to advise >	
5.06	Starter motor redundancy	-	Dual (redundant)	
5.07	Starter battery & charger redundancy	-	Dual (redundant)	
5.08	Battery type	-	VRLA	
5.09	Battery manufacture	-	Vendor to advise >	
5.1	Battery model number	-	Vendor to advise >	
5.11	Number of batteries per starter system	-	Vendor to advise >	
5.12	Battery end of life design period	years	5	
5.13	Crankshaft speed	rpm	1500	
5.14	Engine heater jacket electrical rating	kW	Vendor to advise >	
5.15	Method of cooling	-	On board radiator	
5.16	Number of cylinders	-	Vendor to advise >	
5.17	Lubricating oil cooler type	-	Air cooled	
5.18	Return fuel cooler	-	Yes	
5.19	Cylinder arrangement	-	Vendor to advise >	
5.2	Engine displacement	-	Vendor to advise >	
5.21	Compression ratio	-	Vendor to advise >	
5.22	Rotating inertia	-	Vendor to advise >	

Client:	STACK INFRASTRUCTURE
Project:	MIL07
Document:	OFCI Specification - Generator
Doc ID:	MIL07-DBA-XX-XX-SP-E-60002
Date:	07/11/2025
Revision:	P01

3,0 MW, 400V, STANDBY GENERATOR				
Item	**Description**	**Units**	**Specifications**	**Vendor Proposal**
6.00	**Fuel**			
6.01	Fuel		Diesel / HVO	
6.02	Fuel consumption 25% load	l/h	Vendor to advise >	
6.03	Fuel consumption 50% load	l/h	Vendor to advise >	
6.04	Fuel consumption 75% load	l/h	Vendor to advise >	
6.05	Fuel consumption 100% load	l/h	Vendor to advise >	
6.06	Fuel return to tank at 100% load	l/h	Vendor to advise >	
6.07	Lube oil consumption (% of fuel / hour)	%/h	Vendor to advise >	
6.08	Auto lubrication oil top up	-	Yes	
6.09	Lube oil autonomy	h	Vendor to advise >	
6.10	Fuel Autonomy	h	48 @ full system load	
6.11	Centralise or belly tank	-	Dedicated Buried tank	
6.12	Number of centralised tanks	-	NA	
6.13	Centralised fuel delivery system	-	NA	
6.14	Number fuel delivery pumps (not duplex)	-	1+1 electric pumps 1 manual pump	
6.15	Local service fuel tanks (each set)	-	Vendor to advise	
6.16	Local service fuel tank fire rating	h	NA	
6.17	Fuel polishing	-	Yes, indipendent system for genset	
6.18	Time to polish tank contents	h	Vendor to advise >	
6.19	Urea Autonomy	h	To match fuel storage (at least 800 l)	
7.00	**Cooling and Heat Rejection**			
7.01	Air intake volume at full load	m^3/s	Vendor to advise >	
7.02	Air intake speed at full load	m/s	Vendor to advise >	
7.03	Engine block heat dissipation	kW	Vendor to advise >	
7.04	Radiator heat rejection	kW	Vendor to advise >	
7.05	Exhaust heat rejection	kW	Vendor to advise >	
7.06	Inter cooler heat rejection	kW	Vendor to advise >	
7.07	Exhaust gas temperature	°C	Vendor to advise >	
7.08	Exhaust gas volume at full load	m^3/s	Vendor to advise >	
7.09	Exhaust gas speed at full load	m/s	Vendor to advise >	
8.00	**Cooling and Heat Rejection**			
8.01	Maximum exhaust back pressure	Pa	Vendor to advise >	
8.02	Exhaust diameter	mm	Vendor to advise >	
8.03	Emissions standard	-	Vendor shall include for localised SCR plant per Generator. Exact exhaust emissions criteria are TBC, will be confirmed at the end of Stage 3 design	
8.04	Without SCR - Exhaust emissions NOX @ 5% Ref O_2	mg/Nm^3		
8.05	Without SCR - Exhaust emissions CO @ 5% Ref O_2	mg/Nm^3		
8.06	Without SCR - Exhaust emissions HC @ 5% Ref O_2	mg/Nm^3		
8.07	Without SCR - Exhaust emissions O_2	mg/Nm^3		
8.08	Without SCR - Exhaust emissions CH_2O	mg/Nm^3		
8.09	Without SCR - Particulate Matter	mg/Nm^3	Vendor to advise >	
8.10	With SCR - Exhaust emissions NOX @ 5% Ref O_2	mg/Nm^3	100	
8.11	With SCR - Exhaust emissions CO @ 5% Ref O_2	mg/Nm^3	100	
8.12	With SCR - Exhaust emissions HC @ 5% Ref O_2	mg/Nm^3	Vendor to advise >	
8.13	With SCR - Exhaust emissions O_2	mg/Nm^3	NA	
8.14	With SCR - Exhaust emissions CH_2O	mg/Nm^3	NA	
8.15	With SCR - Exhaust emissions NH3	mg/Nm^3	5	
8.16	With SCR - Exhaust emissions SO2	mg/Nm^3	150	
8.18	With SCR - Particulate Matter	mg/Nm^3	Vendor to advise >	

Client:	STACK INFRASTRUCTURE
Project:	MIL07
Document:	OFCI Specification - Generator
Doc ID:	MIL07-DBA-XX-XX-SP-E-60002
Date:	07/11/2025
Revision:	P01

3,0 MW, 400V, STANDBY GENERATOR				
Item	**Description**	**Units**	**Specifications**	**Vendor Proposal**
9.00	**Alternator**			
9.01	Alternator Manufacturer	-	Vendor to advise >	
9.02	Alternator Model	-	Vendor to advise >	
9.03	Overload capability	%	100% of generator set rating	
9.04	Continuoous rated output with 0.8 pf load	kVA	> 3750	
9.05	Alternator connection configuration		Star 3 wire	
9.06	Duty		S1 to IEC 60034	
9.07	Method of neutral earting		NA	
9.08	Rating of NET/NER		NA	
9.09	NET/NER supply		NA	
9.10	Output frequency	Hz	50	
9.11	Rated output voltage - U_N (EN60034-15)	kV	0,4 +/- 5% (manually adjustable)	
9.12	Operationale voltage (Set at FAT)	kV	0,4	
9.13	Stator winding insulation level	kV	Vendor to advise >	
9.14	AC Test Voltage - $2U_{N+1}$ (EN60034-15)	kV	Vendor to advise >	
9.15	Impulse Withstand Voltage - U_P (EN 60034-15)	kV	Vendor to advise >	
9.16	Input protection		Vendor to advise >	
9.17	Performance Class ISO-8528		G3 to ISO 8528-5	
9.18	Maximum initial load step	%	40	
9.19	2nd load step after 20 seconds	%	60	
9.20	First load rejection from 100% after 20 seconds	%	100	
9.21	Second load rejection after 20 seconds	%	0	
9.22	AVR system		Vendor to advise >	
9.23	AVR type / model		Vendor to advise >	
9.24	Voltage transformers		Alternator connected	
9.25	Droop current transformer		NA	
9.26	Differential protection current transformer		Yes, at star alternator point	
9.27	Number of bearings		Vendor to advise >	
9.28	Bearing temperature sensors		One per bearing	
9.29	Stator temperature sensors		Two per phase	
9.30	Winding temeprature-rise limits @40°C (IEC 60085)	°C	180 (Class H)	
9.31	Temperature rise limit	°C	105 (Class F)	
9.32	Impedances (at alternator kVA rating)			
9.33	X"d - direct Axis Sub transinet Reactance	%	<12%	
9.34	X"d - Saturated Direct Axis Sub transinet Reactance	%	<12%	
9.35	X'd - direct Axis transinet Reactance	%	Vendor to advise >	
9.36	Efficiency at 25% Load:	l/h	Vendor to advise »	
9.37	Efficiency at 50% Load:	l/h	Vendor to advise »	
9.38	Efficiency at 75% Load:	l/h	Vendor to advise »	
9.39	Efficiency at 100% Load:	l/h	Vendor to advise >	
9.40	Marinised alternator		Not Required	
9.41	Winding construction		Formed winding	
9.42	Alternator pole pitch	2/3 or 5/6	Vendor to advise >	
10.00	**Controls**			
10.01	Phase Failure Relay	-	No	
10.02	ATS request to start	-	Yes	
10.03	PMS request to start	-	No	
10.04	UPS recharge inhibit during utility failure:	-	Yes, subject to generator	
10.05	Closed Transition to Utility	-	No	
10.06	Synchronisation System	-	N/A	
10.07	Synchronisation Mode	-	N/A	
10.08	Synchronisation Time, Assuming generators start after 1st crank attempt (generators ready to accept load)	-	NA	
10.09	Generator starting attempts	-	3	
10.10	Generator starting attempt time (crank time)	-	Vendor to advise >	
10.11	Generator rest time (Time between crank attempts)	-	Vendor to advise >	
10.12	Synchronisation Time after 3 crank attempts (All generators ready to accept load)	-	NA	
11.00	**Electrical Protection to Alternator**			
11.01	87L - Three way from star point to generator sync boards	-	Yes, separate relay	
11.02	25 - Synchronism Check	-	N/A	
11.03	27 - Undervoltage - two stage	-	Yes	
11.04	32P - Directional Power	-	Yes	
11.05	40 - Machine Field current - Loss of excitation	-	Yes	
11.06	50/51 - LSI Overcurrent/IDMT	-	Yes - Adjustable	
11.07	50N/51N - Residual Current / Earth Fault/IDMT	-	Yes - Adjustable	
11.08	59P - Phase Overvoltage - two stage	-	Yes	
11.09	59N - Residual Overvoltage - Neutral displacement	-	Yes	
11.1	81 - Under/Over Frequency - Two stage	-	Yes	
11.11	Drive and non-drive bearing temperature two stage	-	Yes	
11.12	Stator winding temperature two stage (three spare sensors	-	Yes	

Client:	STACK INFRASTRUCTURE
Project:	MIL07
Document:	OFCI Specification - Generator
Doc ID:	MIL07-DBA-XX-XX-SP-E-60002
Date:	07/11/2025
Revision:	P01

3,0 MW, 400V, STANDBY GENERATOR					
Item	**Description**		**Units**	**Specifications**	**Vendor Proposal**
12.00	**LV Switchboard**				
12.01	Supplier		-	-	
12.02	Nominal voltage		kV	0.400/0.230	
12.03	Frequency		Hz	50	
12.04	Insulation Voltage		V	690	
12.05	Earthing System		-	TNC-S	
12.06	Power connection			busbar to the main low voltage swithcboard	
12.07	load bank connection			powerlocks (100% sized) in the main GE LV switchboard	
12.08	3ph Busbar Type / Rating		A	Vendor to advise »	
12.09	3ph Busbar Quantity and Size		-	Vendor to advise »	
12.10	Neutral Busbar Rating			100%	
12.11	Fault Rating, Icw			50kA, 1s	
12.12	Auxiliary supply voltages		V	Vendor to advise >	
12.13	Busbar Material		Cu/ Al	Cu	
12.14	Busbar Insulation		Yes/No	Vendor to advise >	
12.15	Thermal Imaging Facility		Yes/No	Yes	
12.16	Ambient Temperature (Min/Max)		degC.	35 / 40	
12.17	Form of Separation		-	4B	
12.18	Input Protection		IP	IP31	
12.19	Accessibiltiy		-	Front	
12.20	Power Cables Inlet		-	from container side	
12.21	Power Cables Outlet		-	from container side	
12.22	Auxiliary Cables Inlet		-	from container side	
12.23	Auxiliary Cables Outlet		-	from container side	
12.24	L.V. Switchgear Internal Standard			IEC/EN 61439-2	
12.25	Low Voltage Directive			2006/95/EC	
12.26	Quality Assurance System			IS EN ISO 9001:2015	
12.27	EMC Directive			IEC 61000	
13.00	**Fire Systems**				
13.01	Fire detection and alarms		-	Vendor	
13.02	Fire panel and interconnection with DC system		-	Vendor	
13.03	Thermal drop valve to fuel valve		-	Yes	
13.04	Flame detectors		-	Vendor	
13.05	Heat point detectors		-	Vendor	
13.06	Functional devices:		-	Yes	
13.07	Fire sprinkler suppression (noozle and pipes provision)		-	Vendor	
14.00	**Alarm & Monitoring Points**				
14.01	Refer to specifications		-	Refer to I/O lit	
15.00	**Generator Housing, Ventilation & Attenuation**				
15.01	Maximum Sound Pressure Level:		dB(LwA)	see above	
15.02	Containerised or within generator room:		-	Containerised	
15.03	Location / position:		-	External Yard	
15.04	[Corrosion resistance / marination] Exposed components,		-	ISO 12944 C3	
15.05	Component paint finishes:		-		
15.06	Air inlet louvres (and air scoops if applicable):		-	Manufacturer's standard	
15.07	Air inlet frost protection:		-	Yes. -10°C	
15.08	Attenuators:		-	In line with airflow on generator air inlet and outlet.	
15.09	Fire Rating		-	N/A	
16.00	**Physical Characteristics:**				
16.01	Installed and operating	Weight:	kg	Vendor to advise >	
16.02		Length:	mm	Vendor to advise >	
16.03		width:	mm	Vendor to advise >	
16.04		Height:	mm	Vendor to advise >	
16.05	Largest component for installation	Weight:	kg	Vendor to advise >	
16.06		Length:	mm	Vendor to advise >	
16.07		Width:	mm	Vendor to advise >	
16.08		Height:	mm	Vendor to advise »	
16.09	Largest component for future replacement	Weight:	kg	Vendor to advise »	
16.10		Length:	mm	Vendor to advise >	
16.11		Width:	mm	Vendor to advise »	
16.12		Height:	mm	Vendor to advise >	
17.00	**Testing, Commissioning & Training**				
17.01	FAT		-	Vendor to advise >	
17.02	FAT full load test duration		hours	Vendor to advise >	
17.03	Load bank minimum rating		kWVkW	Vendor to advise >	
17.04	Number of sets tested in parallel		-	N/A	
17.05	SAT		-	Required	
17.06	SAT full load test duration		hours	Vendor to advise >	
17.07	Load bank minimum rating		kVA/kW	Vendor to advise >	
17.08	Number of sets tested in parallel		-	Vendor to advise »	
17.09	FAT & SAT fuel oil and lubrication oil samples:		-	Required.	
17.10	FAT & SAT vibration testing:		-	Required.	
17.11	IST		-	Vendor attendance and support required for full duration	
17.12	Training		-	Site based training of client operational team.	
18.00	**Notes**				

Client:	STACK INFRASTRUCTURE
Project:	MIL07
Document:	OFCI Specification - Generator
Doc ID:	MIL07-DBA-XX-XX-SP-E-60002
Date:	07/11/2025
Revision:	P01

3,0 MW, 400V, STANDBY GENERATOR				
Item	**Description**	**Units**	**Specifications**	**Vendor Proposal**
18.01	Vendor to provide drip pan with leak detection.			

Client:	STACK INFRASTRUCTURE
Project:	MIL07
Document:	OFCI Specification - Generator
Doc ID:	MIL07-DBA-XX-XX-SP-E-60002
Date:	07/11/2025
Revision:	P01

1,0 MW, 400V, STANDBY GENERATOR				
Item	**Description**	**Units**	**Specifications**	**Vendor Proposal**
1.00	**General Criteria**			
1.01	Site	-	Milano - Siziano	
1.02	Total number of generators	-	1	
1.03	Day 1 number of generators	-	1	
1.04	Generator References	-	See Schematics	
1.05	Proposed Vendor	-		
2.00	**Manufacturing and FAT Details**			
2.01	Location of engine manufacture		Vendor to advise >	
2.02	Location of alternator manufacture		Vendor to advise »	
2.03	Location of fuel tank manufacture		Vendor to advise >	
2.04	Location of generator set assembly		Vendor to advise »	
2.05	Location of controls assembly		Vendor to advise »	
2.06	Location of project and design office		Vendor to advise >	
2.07	Location of FAT with load bank and controls		Vendor to advise »	
2.08	FAT load bank data (MW, MVA and power factor)		Vendor to advise >	
2.09	Maximum number of parallel sets at FAT		Vendor to advise »	
3.00	**Generator Set Criteria**			
3.01	Generator set rating / type (ISO 8528-1)	-	DCP	
3.02	Generator set rating (net)	MW	1,0	
3.03	Power factor	-	0.8 lagging	
3.04	Vibration criteria	-	Within ISO 8528-9 limits.	
3.05	Ambient operating temperatures	-		
3.06	Ashrae Weather Centre	years	N=20	
3.07	External incoming air temperature (dry bulb)	°C	40°C	
3.08	Internal room:	°C	NA	
3.09	Installation altitude	m	93 m above sea level	
3.10	Sound pressure level break out at 1m from all surfaces	dB(L_{PA})	75 dBA at external façade louvre.	
3.11	Engine Noise Output	dB(L_{PA})	Vendor to advise >	
3.12	Exhaust Noise Output	dB(L_{PA})	Vendor to advise >	
3.13	Air inlet at 1m	dB(L_{PA})	Vendor to advise >	
3.14	Air outlet at 1m	dB(L_{PA})	Vendor to advise >	
3.15	Seismic measures	-	Vendor to advise »	
3.16	Generator set controller type	-	Vendor to advise »	
3.17	Generator set controller model	-	Vendor to advise »	
4.00	**Auxiliary Supplies**			
4.01	Auxiliary electrical supply requirement	V/ph/Hz	400V/3ph/50	
4.02	Distribution boards		One per generator	
4.03	External ATS to auxiliary supply distribution board		No	
4.04	Auxiliary supply source		LV Power Module	
4.05	Auxiliary supply (off-load) electrical demand (i.e. controls, heater jacket, chargers, fuel pumps, lighting etc)	kW	Vendor to advise >	
5.00	**Diesel Engine**			
5.01	Diesel engine manufacturer	-	Vendor to advise >	
5.02	Diesel engine model	-	Vendor to advise >	
5.03	Optimisation	-	Emissions Optimised / BImSchV Regulation Diesel	
5.04	Governor Type	-	Isochronous electronic	
5.05	Governor Control Limits	-	Vendor to advise >	
5.06	Starter motor redundancy	-	Dual (redundant)	
5.07	Starter battery & charger redundancy	-	Dual (redundant)	
5.08	Battery type	-	VRLA	
5.09	Battery manufacture	-	Vendor to advise >	
5.1	Battery model number	-	Vendor to advise >	
5.11	Number of batteries per starter system	-	Vendor to advise >	
5.12	Battery end of life design period	years	5	
5.13	Crankshaft speed	rpm	1500	
5.14	Engine heater jacket electrical rating	kW	Vendor to advise >	
5.15	Method of cooling	-	On board radiator	
5.16	Number of cylinders	-	Vendor to advise >	
5.17	Lubricating oil cooler type	-	Air cooled	
5.18	Return fuel cooler	-	Yes	
5.19	Cylinder arrangement	-	Vendor to advise >	
5.2	Engine displacement	-	Vendor to advise >	
5.21	Compression ratio	-	Vendor to advise >	
5.22	Rotating inertia	-	Vendor to advise >	

Client:	STACK INFRASTRUCTURE
Project:	MIL07
Document:	OFCI Specification - Generator
Doc ID:	MIL07-DBA-XX-XX-SP-E-60002
Date:	07/11/2025
Revision:	P01

1,0 MW, 400V, STANDBY GENERATOR				
Item	**Description**	**Units**	**Specifications**	**Vendor Proposal**
6.00	**Fuel**			
6.01	Fuel		Diesel / HVO	
6.02	Fuel consumption 25% load	l/h	Vendor to advise >	
6.03	Fuel consumption 50% load	l/h	Vendor to advise >	
6.04	Fuel consumption 75% load	l/h	Vendor to advise >	
6.05	Fuel consumption 100% load	l/h	Vendor to advise >	
6.06	Fuel return to tank at 100% load	l/h	Vendor to advise >	
6.07	Lube oil consumption (% of fuel / hour)	%/h	Vendor to advise >	
6.08	Auto lubrication oil top up	-	Yes	
6.09	Lube oil autonomy	h	Vendor to advise >	
6.1	Fuel Autonomy	h	48 @ full system load	
6.11	Centralise or belly tank	-	Dedicated Buried tank	
6.12	Number of centralised tanks	-	NA	
6.13	Centralised fuel delivery system	-	NA	
6.14	Number fuel delivery pumps (not duplex)	-	1+1 electric pumps 1 manual pump	
6.15	Local service fuel tanks (each set)	-	Vendor to advise	
6.16	Local service fuel tank fire rating	h	2	
6.17	Fuel polishing	-	Yes, indipendent system for genset	
6.18	Time to polish tank contents	h	Vendor to advise >	
6.19	Urea Autonomy	h	To match fuel storage (at least 800 l)	
7.00	**Cooling and Heat Rejection**			
7.01	Air intake volume at full load	m^3/s	Vendor to advise >	
7.02	Air intake speed at full load	m/s	Vendor to advise >	
7.03	Engine block heat dissipation	kW	Vendor to advise >	
7.04	Radiator heat rejection	kW	Vendor to advise >	
7.05	Exhaust heat rejection	kW	Vendor to advise >	
7.06	Inter cooler heat rejection	kW	Vendor to advise >	
7.07	Exhaust gas temperature	°C	Vendor to advise >	
7.08	Exhaust gas volume at full load	m^3/s	Vendor to advise >	
7.09	Exhaust gas speed at full load	m/s	Vendor to advise >	
8.00	**Cooling and Heat Rejection**			
8.01	Maximum exhaust back pressure	Pa	Vendor to advise >	
8.02	Exhaust diameter	mm	Vendor to advise >	
8.03	Emissions standard	-	Vendor shall include for localised SCR plant per Generator. Exact exhaust emissions criteria are TBC, will be confirmed at the end of Stage 3 design	
8.04	Without SCR - Exhaust emissions NOX @ 5% Ref O_2	mg/Nm^3		
8.05	Without SCR - Exhaust emissions CO @ 5% Ref O_2	mg/Nm^3		
8.06	Without SCR - Exhaust emissions HC @ 5% Ref O_2	mg/Nm^3		
8.07	Without SCR - Exhaust emissions O_2	mg/Nm^3		
8.08	Without SCR - Exhaust emissions CH_2O	mg/Nm^3		
8.09	Without SCR - Particulate Matter	mg/Nm^3	Vendor to advise >	
8.10	With SCR - Exhaust emissions NOX @ 5% Ref O_2	mg/Nm^3	100	
8.11	With SCR - Exhaust emissions CO @ 5% Ref O_2	mg/Nm^3	100	
8.12	With SCR - Exhaust emissions HC @ 5% Ref O_2	mg/Nm^3	Vendor to advise >	
8.13	With SCR - Exhaust emissions O_2	mg/Nm^3	NA	
8.14	With SCR - Exhaust emissions CH_2O	mg/Nm^3	NA	
8.15	With SCR - Exhaust emissions NH3	mg/Nm^3	5	
8.16	With SCR - Exhaust emissions SO2	mg/Nm^3	150	
8.18	With SCR - Particulate Matter	mg/Nm^3	Vendor to advise >	

Client:	STACK INFRASTRUCTURE
Project:	MIL07
Document:	OFCI Specification - Generator
Doc ID:	MIL07-DBA-XX-XX-SP-E-60002
Date:	07/11/2025
Revision:	P01

1,0 MW, 400V, STANDBY GENERATOR				
Item	**Description**	**Units**	**Specifications**	**Vendor Proposal**
9.00	**Alternator**			
9.01	Alternator Manufacturer	-	Vendor to advise >	
9.02	Alternator Model	-	Vendor to advise >	
9.03	Overload capability	%	100% of generator set rating	
9.04	Continuous rated output with 0.8 pf load	kVA	1250	
9.05	Alternator connection configuration		Star 3 wire	
9.06	Duty		S1 to IEC 60034	
9.07	Method of neutral earting		NA	
9.08	Rating of NET/NER		NA	
9.09	NET/NER supply		NA	
9.10	Output frequency	Hz	50	
9.11	Rated output voltage - U_N (EN60034-15)	kV	0,4 +/- 5% (manually adjustable)	
9.12	Operationale voltage (Set at FAT)	kV	0,4	
9.13	Stator winding insulation level	kV	Vendor to advise >	
9.14	AC Test Voltage - $2U_{N+1}$ (EN60034-15)	kV	Vendor to advise >	
9.15	Impulse Withstand Voltage - U_P (EN 60034-15)	kV	Vendor to advise >	
9.16	Input protection		Vendor to advise >	
9.17	Performance Class ISO-8528		G3 to ISO 8528-5	
9.18	Maximum initial load step	%	40	
9.19	2nd load step after 20 seconds	%	60	
9.20	First load rejection from 100% after 20 seconds	%	100	
9.21	Second load rejection after 20 seconds	%	0	
9.22	AVR system		Vendor to advise >	
9.23	AVR type / model		Vendor to advise >	
9.24	Voltage transformers		Alternator connected	
9.25	Droop current transformer		NA	
9.26	Differential protection current transformer		Yes, at star alternator point	
9.27	Number of bearings		Vendor to advise >	
9.28	Bearing temperature sensors		One per bearing	
9.29	Stator temperature sensors		Two per phase	
9.30	Winding temeprature-rise limits @40°C (IEC 60085)	°C	180 (Class H)	
9.31	Temperature rise limit	°C	105 (Class F)	
9.32	Impedances (at alternator kVA rating)			
9.33	X"d - direct Axis Sub transinet Reactance	%	<12%	
9.34	X"d - Saturated Direct Axis Sub transinet Reactance	%	<12%	
9.35	X'd - direct Axis transinet Reactance	%	Vendor to advise >	
9.36	Efficiency at 25% Load:	l/h	Vendor to advise »	
9.37	Efficiency at 50% Load:	l/h	Vendor to advise »	
9.38	Efficiency at 75% Load:	l/h	Vendor to advise »	
9.39	Efficiency at 100% Load:	l/h	Vendor to advise >	
9.40	Marinised alternator		Not Required	
9.41	Winding construction		Formed winding	
9.42	Alternator pole pitch	2/3 or 5/6	Vendor to advise >	
10.00	**Controls**			
10.01	Phase Failure Relay	-	Yes	
10.02	ATS request to start	-	No	
10.03	PMS request to start	-	No	
10.04	UPS recharge inhibit during utility failure:	-	Yes, subject to generator	
10.05	Closed Transition to Utility	-	No	
10.06	Synchronisation System	-	N/A	
10.07	Synchronisation Mode	-	N/A	
10.08	Synchronisation Time, Assuming generators start after 1st crank attempt (generators ready to accept load)	-	<20s	
10.09	Generator starting attempts	-	3	
10.10	Generator starting attempt time (crank time)	-	Vendor to advise >	
10.11	Generator rest time (Time between crank attempts)	-	Vendor to advise >	
10.12	Synchronisation Time after 3 crank attempts (All generators ready to accept load)	-	NA	
11.00	**Electrical Protection to Alternator**			
11.01	87L - Three way from star point to generator sync boards	-	Yes, separate relay	
11.02	25 - Synchronism Check	-	N/A	
11.03	27 - Undervoltage - two stage	-	Yes	
11.04	32P - Directional Power	-	Yes	
11.05	40 - Machine Field current - Loss of excitation	-	Yes	
11.06	50/51 - LSI Overcurrent/IDMT	-	Yes - Adjustable	
11.07	50N/51N - Residual Current / Earth Fault/IDMT	-	Yes - Adjustable	
11.08	59P - Phase Overvoltage - two stage	-	Yes	
11.09	59N - Residual Overvoltage - Neutral displacement	-	Yes	
11.1	81 - Under/Over Frequency - Two stage	-	Yes	
11.11	Drive and non-drive bearing temperature two stage	-	Yes	
11.12	Stator winding temperature two stage (three spare sensors	-	Yes	

Client:	STACK INFRASTRUCTURE
Project:	MIL07
Document:	OFCI Specification - Generator
Doc ID:	MIL07-DBA-XX-XX-SP-E-60002
Date:	07/11/2025
Revision:	P01

1,0 MW, 400V, STANDBY GENERATOR					
Item	**Description**		**Units**	**Specifications**	**Vendor Proposal**
12.00	**LV Switchboard**				
12.01	Supplier		-	-	
12.02	Nominal voltage		kV	0.400/0.230	
12.03	Frequency		Hz	50	
12.04	Insulation Voltage		V	690	
12.05	Earthing System		-	TNC-S	
12.06	Power connection			busbar to the main low voltage swithcboard	
12.07	load bank connection			powerlocks (100% sized) in the main GE LV switchboard	
12.08	3ph Busbar Type / Rating		A	Vendor to advise »	
12.09	3ph Busbar Quantity and Size		-	Vendor to advise »	
12.10	Neutral Busbar Rating			100%	
12.11	Fault Rating, Icw			50kA, 1s	
12.12	Auxiliary supply voltages		V	Vendor to advise >	
12.13	Busbar Material		Cu/ Al	Cu	
12.14	Busbar Insulation		Yes/No	Vendor to advise >	
12.15	Thermal Imaging Facility		Yes/No	Yes	
12.16	Ambient Temperature (Min/Max)		degC.	35 / 40	
12.17	Form of Separation		-	2B	
12.18	Input Protection		IP	IP31	
12.19	Accessibiltiy		-	Front	
12.20	Power Cables Inlet		-	from container side	
12.21	Power Cables Outlet		-	from container side	
12.22	Auxiliary Cables Inlet		-	from container side	
12.23	Auxiliary Cables Outlet		-	from container side	
12.24	L.V. Switchgear Internal Standard			IEC/EN 61439-2	
12.25	Low Voltage Directive			2006/95/EC	
12.26	Quality Assurance System			IS EN ISO 9001:2015	
12.27	EMC Directive			IEC 61000	
13.00	**Fire Systems**				
13.01	Fire detection and alarms		-	Vendor	
13.02	Fire panel and interconnection with DC system		-	Vendor	
13.03	Thermal drop valve to fuel valve		-	Yes	
13.04	Flame detectors		-	Vendor	
13.05	Heat point detectors		-	Vendor	
13.06	Functional devices:		-	Yes	
13.07	Fire suppression (noozle and pipes provision)		-	Vendor	
14.00	**Alarm & Monitoring Points**				
14.01	Refer to specifications		-	Refer to I/O lit	
15.00	**Generator Housing, Ventilation & Attenuation**				
15.01	Maximum Sound Pressure Level:		dB(LwA)	see above	
15.02	Containerised or within generator room:		-	Containerised	
15.03	Location / position:		-	External Yard	
15.04	[Corrosion resistance / marination] Exposed components,		-	ISO 12944 C3	
15.05	Component paint finishes:		-		
15.06	Air inlet louvres (and air scoops if applicable):		-	Manufacturer's standard	
15.07	Air inlet frost protection:		-	Yes. -20°C	
15.08	Attenuators:		-	In line with airflow on generator air inlet and outlet.	
15.09	Fire Rating		-	N/A	
16.00	**Physical Characteristics:**				
16.01	Installed and operating	Weight:	kg	Vendor to advise >	
16.02		Length:	mm	Vendor to advise >	
16.03		width:	mm	Vendor to advise >	
16.04		Height:	mm	Vendor to advise >	
16.05	Largest component for installation	Weight:	kg	Vendor to advise >	
16.06		Length:	mm	Vendor to advise >	
16.07		Width:	mm	Vendor to advise >	
16.08		Height:	mm	Vendor to advise »	
16.09	Largest component for future replacement	Weight:	kg	Vendor to advise »	
16.10		Length:	mm	Vendor to advise >	
16.11		Width:	mm	Vendor to advise »	
16.12		Height:	mm	Vendor to advise >	
17.00	**Testing, Commissioning & Training**				
17.01	FAT		-	Vendor to advise >	
17.02	FAT full load test duration		hours	Vendor to advise >	
17.03	Load bank minimum rating		kWVkW	Vendor to advise >	
17.04	Number of sets tested in parallel		-	N/A	
17.05	SAT		-	Required	
17.06	SAT full load test duration		hours	Vendor to advise >	
17.07	Load bank minimum rating		kVA/kW	Vendor to advise >	
17.08	Number of sets tested in parallel		-	Vendor to advise »	
17.09	FAT & SAT fuel oil and lubrication oil samples:		-	Required.	
17.10	FAT & SAT vibration testing:		-	Required.	
17.11	IST		-	Vendor attendance and support required for full duration	
17.12	Training		-	Site based training of client operational team.	
18.00	**Notes**				

Client:	STACK INFRASTRUCTURE
Project:	MIL07
Document:	OFCI Specification - Generator
Doc ID:	MIL07-DBA-XX-XX-SP-E-60002
Date:	07/11/2025
Revision:	P01

1,0 MW, 400V, STANDBY GENERATOR				
Item	**Description**	**Units**	**Specifications**	**Vendor Proposal**
18.01	Vendor to provide drip pan with leak detection.			

Legal Office:
DBA S.p.A.
Piazza Roma 19
32045, Santo Stefano di Cadore (BL)
Italy
+39 0422 693511
dbaprogetti@pec.dbagroup.it
www.dbagroup.it

Branch Office:
DBA S.p.A.
Via Natale Battaglia 10
20127, Milan
Italy
+39 0422 693511
dbaprogetti@pec.dbagroup.it
www.dbagroup.it

COMUNE DI SIZIANO

Principal: **STACK INFRASTRUCTURE**

Project:

MIL07

MIL07-DBA-XX-XX-SP-E-60003 **13038001**			Title: **OFCI Specification Medium Voltage Substation**
PP0 - RIBA 3	**IES**	**60003**	
Prog.	**D. De Bettin** **S. Busetti**	**PM**	**A. Masiero**
BIMM	**S. Di Biase**	**BIMC**	**R. Sodano**

Rev	EDITED	CHECKED	APPROVED	DATE	DESCRIPTION
P01	D. TOFFALI	S. SONCINI	A. MASIERO	07/11/2025	S4 - Riba 3 Submittal

Client:	STACK INFRASTRUCTURE
Project:	MIL07
Document:	OFCI Specification - Medium Voltage Substation
Doc ID:	MIL07-DBA-XX-XX-SP-E-60003
Date:	07/11/2025
Revision:	P01

DBA

STACK INFRASTRUCTURE

MV SWITCHBOARD GENERAL				
Item	**Description**	**Units**	**Engineer Specifies**	**Vendor Proposes**
1.00	**General Information**			
1.01	Site	-	Milano, Siziano	
1.02	Location	-	MV substation	
1.03	Number of units day ultimate	-	2	
1.04	Number of units day 1	-	2	
1.05	Equipment references	-	See schematics	
2.00	**General Characteristics**			
2.01	Nominal voltage	kVA/kW	11	
2.02	Frequency	Hz	50	
2.03	Number of phases	-	3	
2.04	Neutral earthing - utility suplly	-	See schematics	
2.05	Neutral earthing - site generator supply	-	See schematics	
3.00	**Switchgear Characteristics**			
3.01	Insulation type	-	GIS SF6 free - AIS	
3.02	Rated voltage	kV	24	
3.03	Rated power frequency withstand voltage	kV	50	
3.04	Rated impulse withstand voltage	kV	125	
3.05	Rated busbar current	A	1600	
3.06	Busbar arrangement	-	Single, 3 Phase	
3.07	Rated short time current (3 seconds)	kA	25	
3.08	Rated short circuit breaking current	kA	25	
3.09	Rated peak withstand current	kA	63	
3.10	Rated frequency	Hz	50	
3.11	IEC 62271-200 Loss of Service Continuity		LSC 2B	
3.12	IEC 62271-200 Partition Class		PM	
3.13	IEC 62271-200 Internal Arc classification		IAC AFL 25kA 1s	
3.14	Auxiliary supply voltages: spring charging motor	V	230 Vac - no break supply	
3.15	Auxiliary supply voltages: control and protection	V	230 Vac / 24 Vdc - no break supply	
3.16	Auxiliary supply voltages: anti condensation heaters	V	230 Vac	
3.17	Degree of ingress protection (sealed MV parts)		IP54	
3.18	Degree of ingress protection (LV compartment)		IP4X	
3.19	Maximum ambient temperature	°C	40	
3.20	Minimum ambient temperature	°C	-10	
3.21	Mechanical endurance		M2	
3.22	Electrical endurance		E2	
3.23	Restrike		C2	
3.24	Extendable at each end?		Yes, on the right side if AIS is proposed	
3.25	Floor type (raised/solid)		Solid	
3.26	Plinth		Yes	
3.27	Under floor steel support frame	Yes/No	No	
3.28	Circuit breaker , lifting trolley provided		AIS withdrawable breakers	
3.29	Altitude at side	m	<1000	
3.30	Rated operating sequence of circuit breakers		O-0,3s-CO-3min-CO	
3.31	Colour - all panles		Manufacturer default	
3.32	Colour - identification banding		None	
3.33	Colour - circuit mimic lines		Black	
3.34	Label colours		White with black text	
3.35	Arc flash mitigation		Integral	
4.00	**Busbar connected equipment**			
4.01	Voltage transformer. - A damping winding and resistor are to be included for suppression of ferroresonance - IAC AF rating will be considered but costs for caging to prevent rear access will be included within the analysis	Pattern	Withdrawable	
4.02		Ratio	11000 / v3 : 100 / v 3	
4.03		VA/Class	10/50 /0.5/3P	
4.04		Windings	3-phases 3-limb 2-winding	
4.05		Connection	Busbar connected	
4.06		MV fuse	Yes	
4.07		Function	Metering / protection	
4.08	Earth switch	Pattern	Fixed	
4.09		Rating	Fault make 63 kA	
4.10		Action	Manual indipendent spring assisted	
5.00	**Panel Reference**			
5.01	01 - Panel type P01	Line 1	01	
5.02		Line 2	Utility Incomer	
5.03		Line 3		
5.04	02 - Panel type P02	Line 1	02	
5.05		Line 2	Ring Feeder	
5.06		Line 3		
5.07	03 - Panel type P02	Line 1	03	
5.08		Line 2	Ring Feeder	
5.09		Line 3		
5.10	04 - Panel type P02	Line 1	04	
5.11		Line 2	Spare Feeder	
5.12		Line 3		
5.13	05 - Panel type P03	Line 1	04	
5.14		Line 2	VT MV panel	
5.15		Line 3		

Client:	STACK INFRASTRUCTURE
Project:	MIL07
Document:	OFCI Specification - Medium Voltage Substation
Doc ID:	MIL07-DBA-XX-XX-SP-E-60003
Date:	07/11/2025
Revision:	P01

P01 UTILITY INCOMER					
Item	**Description**			**Engineer Specifies**	**Vendor Proposes**
1.01	Circuit breaker current rating			1600 A	
1.02	Circuit breaker pattern			Vendor proposes	
1.03	Breaker type			SF6 free	
1.04	Control			Manual and electrical local/remote	
1.05	Operating mechanism			Motor charged spring	
1.06	Earthing			Circuit side	
1.07	Current Transformers	Core 1	Ratio	1600/5 A	
1.08			VA/Class	CL 0.2	
1.09			Function	Metering	
1.10		Core 2	Ratio	1600/5 A	
1.11			VA/Class	5P20	
1.12			Function	Protection relay 1	
1.13		Core 3	Ratio	1600/5 A	
1.14			VA/Class	5P20	
1.15			Function	Protection relay 2	
1.16		Core 4	Ratio		
1.17			VA/Class		
1.18			Function		
1.19	Voltage Trasnformer (notes 4)		Pattern	Demountable and primary fused	
1.20			Ratio	11000 / √3 : 100 / √ 3	
1.21			VA/Class	10/50 /0.5/3P	
1.22			Windings	3-phases 3-limb 2-winding	
1.23			Connection	Circuit side	
1.24			Function	Protection	
1.25	Protection Relay 1			50BF	
1.26				50/51	
1.27				50N/51N	
1.28				27	
1.29				74/86/94	
1.30				H2/H5/INRUSH restraint	
1.31				Trip send and receive	
1.32	Protection Relay 2			87B	
1.33				50BF	
1.34				74/86/94	
1.35				Trip send and receive	
1.36					
1.37					
1.38					
1.39					
1.40	Metering		supplier	Switchboard vendor	
1.41			Manufacturer		
1.42			Model		
1.43			Comms	Ethernet / RS485	
1.44			Type	Power quality meter	
1.45			Power Supply	230 Vac / 24 Vdc - no break supply	
1.46	Switches and Push Buttons			Local/Remote	
1.47				Open/Close	
1.48				spring charging motor auto/off	
1.49				Lamp test	
1.50	Indications			Closed/Open	
1.51				Fault trip	
1.52				Trip circuit healthy	
1.53				Voltage indicators	
1.54				Earth switch status closed/open	
1.55	Surge protection			Yes	
1.56	Miscellaneous			CT & VT test blocks (front of panel)	
1.57				IDMT protection settin group selection	
1.58				IDMT protection blocking	
1.59				Capacitive voltage detecting system	
1.60				Arc flash detection	
1.61	Cables		Top/bottom entry	Bottom	
1.62			Cable type	RG26H1M16 CPR	
1.63			Conductor	Copper	
1.64			Cores	refer to cable list	
1.65			Size	refer to cable list	
1.66			Number of cables	refer to cable list	

Note 1: Multiple functions may be inclued in one relay, unless otherwise stated
Note 2: Digital input and output required for PMS/SCADA/PLC system are to be developed by the cendor according to the I/O list
Note 3: Protection relays to be enabled as dual access node for parallel redundant protocol (IEC 62439-3) networks application using IEC 61850 protocol.
Note 4: A damping winding and resistor are to be incluedd for suppression of ferroresonance
Note 5: All swithces shall have padlock facility
Note 6: Local/Remote and spring charging motor auto/off shall have the switch position repated to customer terminals or comminications I/O as indicated in the I/O point data sheet
Note 7: Surge suppression as required
Note 8: Energy meter must be MID compliant
Note 9: Intertrip required between relay 1 and upstream feeder

Client:	STACK INFRASTRUCTURE
Project:	MIL07
Document:	OFCI Specification - Medium Voltage Substation
Doc ID:	MIL07-DBA-XX-XX-SP-E-60003
Date:	07/11/2025
Revision:	P01

P02 RING FEEDER					
Item	**Description**			**Engineer Specifies**	**Vendor Proposes**
1.01	Circuit breaker current rating			1250 A	
1.02	Circuit breaker pattern			Vendor proposes	
1.03	Breaker type			SF6 free	
1.04	Control			Manual and electrical local/remote	
1.05	Operating mechanism			Motor charged spring	
1.06	Earthing			Circuit side	
1.07	Current Transformers	Core 1	Ratio	1250/5	
1.08			VA/Class	CL 0.2	
1.09			Function	Metering	
1.10		Core 2	Ratio	1250/5	
1.11			VA/Class	5P20	
1.12			Function	Protection relay 1	
1.13		Core 3	Ratio	1250/5	
1.14			VA/Class	5P20	
1.15			Function	Protection relay 2	
1.16	Voltage Trasnformer (notes 4)		Pattern		
1.17			Ratio		
1.18			VA/Class		
1.19			Windings		
1.20			Connection		
1.21			Function		
1.22	Protection Relay 1			50BF	
1.23				50/51	
1.24				50N/51N	
1.25				74/86/94	
1.26				H2/H5/INRUSH restraint	
1.27				Trip send and receive	
1.28	Auxiliary Relays				
1.29					
1.30					
1.31	Metering		supplier	Switchboard vendor	
1.32			Manufacturer		
1.33			Model		
1.34			Comms	Ethernet / RS485	
1.35			Type	Power quality meter	
1.36			Power Supply	230 Vac / 24 Vdc - no break supply	
1.37	Switches and Push Buttons			Local/Remote	
1.38				Open/Close	
1.39				spring charging motor auto/off	
1.40				Lamp test	
1.41	Indications			Closed/Open	
1.42				Fault trip	
1.43				Trip circuit healthy	
1.44				Voltage indicators	
1.45				Earth switch status closed/open	
1.46	Surge protection			Yes	
1.47	Miscellaneous			CT & VT test blocks (front of panel)	
1.48				IDMT protection settin group selection	
1.49				IDMT protection blocking	
1.50				Capacitive voltage detecting system	
1.51				Arc flash detection	
1.52	Cables		Top/bottom entry	Bottom	
1.53			Cable type	RG26H1M16 CPR	
1.54			Conductor	Copper	
1.55			Cores	refer to cable list	
1.56			Size	refer to cable list	
1.57			Number of cables	refer to cable list	

Note 1: Multiple functions may be inclued in one relay, unless otherwise stated
Note 2: Digital input and output required for PMS/SCADA/PLC system are to be developed by the cendor according to the I/O list
Note 3: Protection relays to be enabled as dual access node for parallel redundant protocol (IEC 62439-3) networks application using IEC 61850 protocol.
Relays to accept IRIG-B or PTP time synchronisation signal from GPS server by others
Note 4: A damping winding and resistor are to be incluedd for suppression of ferroresonance
Note 5: All swithces shall have padlock facility
Note 6: Local/Remote and spring charging motor auto/off shall have the switch position repated to customer terminals or comminications I/O as indicated in the I/O point data sheet
Note 7: Surge suppression as required
Note 8: Energy meter must be MID compliant

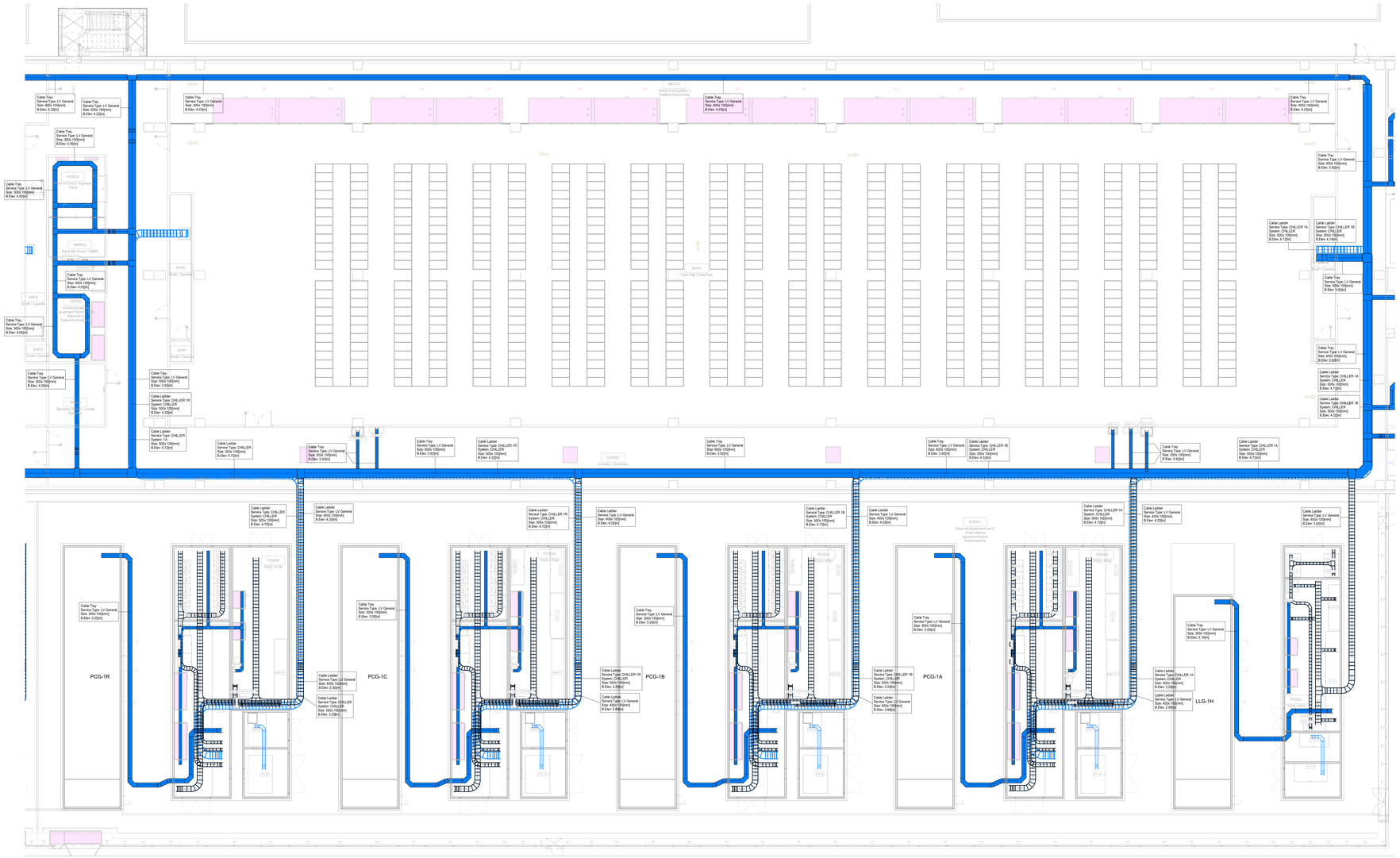

0 2 4 6 8 10m

LEGEND/LEGENDA

Distribuzione Bassa Tensione
Low Voltage Containments

Distribuzione Bassa tensione

Containments Low Voltage, Ladder cable tray
Ladder cable try with Sendzimir process, length of the single section m. 3.00, including fastening accessories - thickness 12/10 - Dimensions as indicated in the project

Passerella metallica rettilinea a traversini in acciaio zincato con processo Sendzimir, lunghezza del singolo tratto m. 3.00, compresi accessori di fissaggio - spessore 12/10 - Dimensioni come indicate in progetto -

Distribuzione Bassa tensione

Containments Low Voltage, Ladder cable tray

Solid bottom with Sendzimir process, single element length 3 m, blind or perforated bottom complete with cover for perforated or blind bottom channels, including fixing accessories - thickness 8/10 -

Canale in acciaio zincato con processo Sendzimir, lunghezza del singolo elemento 3 m, a fondo cieco o forato completa di coperchio per canali a fondo forato o cieco, compresi accessori di fissaggio - spessore 8/10

LV Conduit outside diameter Ø 110 mm / Cavidotti Bassa Tensione diametro esterno Ø 110 mm

Electrical LV Pit 2.00x2.00x1.50 m
Pozzetto d'ispezione Bassa Tensione dimensioni 2.00 x 2.00 x 1.50 m

Mechanical Equipment / Attrezzature Meccanica

KEY PLAN

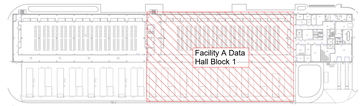

Il presente elaborato è valido solo in coordinamento con tutte le altre discipline specialistiche con le quali deve essere verificata la conformità. Tutte le misure ed eventuali variazioni rispetto al presente elaborato devono essere verificate in cantiere.
This plan only valid in connection & coordination with the plans of all other Specialist disciplines, and must be checked for conformity with these plans. Deviations in dimensions must be clarified with the site management.

CLIENT / COMMITTENTE:

STACK INFRASTRUCTURE

Project Name / Progetto
STACK MIL07 Datacenter

Location / Indirizzo progetto
Via Lombardia, 27010 Siziano PV

BIM Client Consultant / Consulente BIM del Cliente
ARC:BIM
2nd Floor, 140 St John Street - London, GB

ARC:BIM

DESIGN TEAM / TEAM DI PROGETTO

CONSULTING DESIGNER / PROGETTISTA

ARCHITECTURAL DESIGN /
PROGETTO ARCHITETTONICO
Arch. Daniele De Bettin
DBA S.p.A.
Viale Liguria 24, Milano (MI)

STRUCTURAL DESIGN /
PROGETTO STRUTTURE
Ing. Diego Serafini
DBA S.p.A.
Viale G. G. Felissent 20D, Villorba (TV)

MECHANICAL DESIGN /
PROGETTO IMP. MECCANICI ED ELETTRICI
Ing. Sasha Busetti
DBA S.p.A.
Via Natale Battaglia 10, Milano (MI)

ELECTRICAL DESIGN /
PROGETTO IMP. ELETTRICI E SPECIALI
Ing. Sasha Busetti
DBA S.p.A.
Via Natale Battaglia 10, Milano (MI)

COORDINATION / COORDINAMENTO
PM - *Alessandro Masaro*
BIM Manager - *S. Di Biase*
BIM Coordinator - *R. Sodano*

INTEGRATED DESIGN / PROGETTAZIONE COORDINATA:

DBA

DBA S.p.A.
Sede legale:
Piazza Rione, 19
31015 Conegliano Castione (BL)
tel. +39.0423.499311
certificata ISO 9001:2015

Sede secondaria:
Viale Felissent, 20D
31020 Villorba (TV)
tel. +39.0422.919311
C.F./P.IVA 04810150263

PROJECT CODE	ORIGINATOR	FUNCTIONAL	SPECIAL B.	FORM	DISCIPLINE	TYPE	NUMBER
MIL07	DBA	A1	00	DR	E	61	101

NOTES / NOTE:

DBA PROJECT CODE	PROJECT STAGE	STATUS / STATO	REVISION / REVISIONE	DATE / DATA
13038001	WS3	S4	P01	07/11/25

REV.	REVISION DESCRIPTION / DESCRIZIONE REVISIONE	REVISION DATE
P01	S4 - Rilascio 3 Subcontractor	07/11/25

Client / Committente: STACK INFRASTRUCTURE

Oggetto:
Elettrico
Distribuzione - Bassa Tensione
Piano Terra (0G) Fase 1

Subject:
Electrical
Containments - Low Voltage
Ground Floor (0G) Phase 1

SIZE / FORMATO: A0 +1 (841*1189)
STATO SCALA: As indicated
DRAWN / DISEGNATO: F.Shahaj
CHECKED / CONTROLLATO: S. Soncini
APPROVED / APPROVATO: S. Busetti

FILE NAME / NOME FILE: MIL07-DBA-A1-00-DR-E-6101.P01

PROPERTY OF DBA S.p.A. NON UTILIZZABILE O RIPRODUCIBILE (ANCHE IN PARTE) SENZA CONSENSO SCRITTO DA PARTE DI DBA.

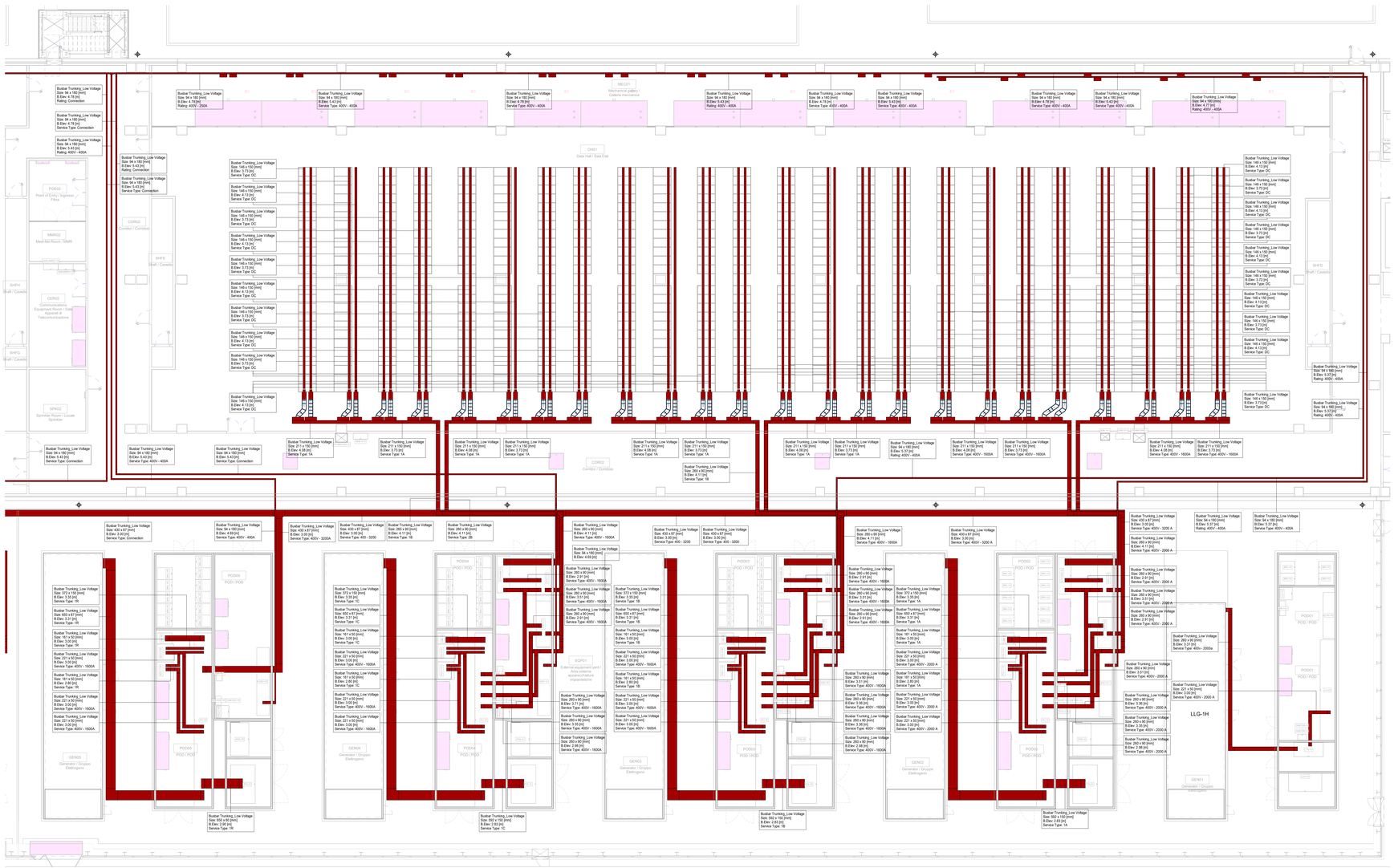

0 2 4 6 8 10m

LEGEND/LEGENDA

Distribuzione Condotti Sbarre
Busbar Containments

- Blindosbarra in Alluminio / Busbar
- Unità di Alimentazione Terminale Sbarra / Busbar Feed Unit
- Scatole di Derivazione / Tapp - Off Boxes
- Containments: System A

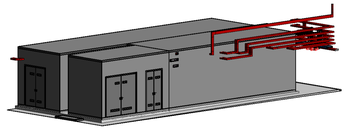

Detail Busbar Distribution

KEY PLAN

Il presente elaborato è valido solo in coordinamento con tutte le altre discipline specialistiche con le quali deve essere verificata la conformità. Tutte le misure ed eventuali variazioni rispetto al presente elaborato devono essere verificate in cantiere.
This plan only valid in connection & coordination with the plans of all other Specialist disciplines, and must be checked for conformity with these plans. Deviations in dimensions must be clarified with the site management.

CLIENT / COMMITTENTE:

STACK INFRASTRUCTURE

Project Name / Progetto:
STACK MIL07 Datacenter

Location / Indirizzo progetto:
Via Lombardia, 27010 Siziano PV

BIM Client Consultant / Consulente BIM del Cliente:
ARC:BIM — ARC:BIM
2nd Floor, 140 St John Street - London, GB

DESIGN TEAM / TEAM DI PROGETTO

CONSULTING DESIGNER / PROGETTISTA

ARCHITECTURAL DESIGN /
PROGETTO ARCHITETTONICO
Ing. Davide De Bettin
DBA S.p.A.
Viale Liguria 24, Milano (MI)

STRUCTURAL DESIGN /
PROGETTO STRUTTURE
Ing. Diego Serafini
DBA S.p.A.
Viale G. G. Felissent 20D, Vittorio (TV)

MECHANICAL DESIGN /
PROGETTO IMP. MECCANICI ED ELETTRICI
Ing. Sacha Buseti
DBA S.p.A.
Via Natale Battaglia 10, Milano (MI)

ELECTRICAL DESIGN /
PROGETTO IMP. ELETTRICI E SPECIALI
Ing. Sacha Buseti
DBA S.p.A.
Via Natale Battaglia 10, Milano (MI)

COORDINATION / COORDINAMENTO
PM - Alessandro Masiero
BIM Coordinator - M. Scrosati
BIM Coordinator - R. Sodero

INTEGRATED DESIGN / PROGETTAZIONE COORDINATA:

DBA

DBA S.p.A.
Sede legale:
Piazza Rosa, 15
32043 S. Stefano di Cadore (BL)
C.F. e P.IVA 01084210251
certificata ISO 9001:2015 DNV.A. n.263310-TA Udine | FT-10010

Sede secondaria:
Viale Felissent, 20/D
31020 Vittorio Ver. (TV)
Tel. 0438 1890111 - Fax 0438 1890100
www.dba-group.com

PROJECT CODE	ORIGINATOR	FUNCTIONAL	SPACIAL B.	FORM	DISCIPLINE	TYPE	NUMBER
MIL07	DBA	A1	00	DR	E	61	103

NOTES / NOTE:

DBA PROJECT CODE	PROJECT STAGE	STATUS / STATO	REVISION / REVISIONE	DATE / DATA
13030001	WS3	S4	P01	07/11/25

REV.	REVISION DESCRIPTION / DESCRIZIONE REVISIONE	REVISION DATE
P01	S4 - Rilsc 2 Subnotar	2011/25

Client / Committente: STACK INFRASTRUCTURE

Oggetto:
Elettrico
Distribuzione - Condotti Sbarre - Bassa Tensione
Piano Terra Blocco 1

Subject:
Electrical
Containments - Low Voltage Busbar
Ground Floor Block 1

PAPER SIZE / FORMATO	A0 +1 841*1189[]
SCALE / SCALA	1:100
DRAWN / DISEGNATO	G. Palomba
CHECKED / CONTROLLATO	S. Soncini
APPROVED / APPROVATO	S. Buseti

FILE NAME / NOME FILE: MIL07-DBA-A1-00-DR-E-61103.P01

PROPERTY OF DBA S.p.A. - NON UTILIZZABILE O RIPRODUBILE (ANCHE IN PARTE) SENZA CONSENSO SCRITTO DA PARTE DI DBA.

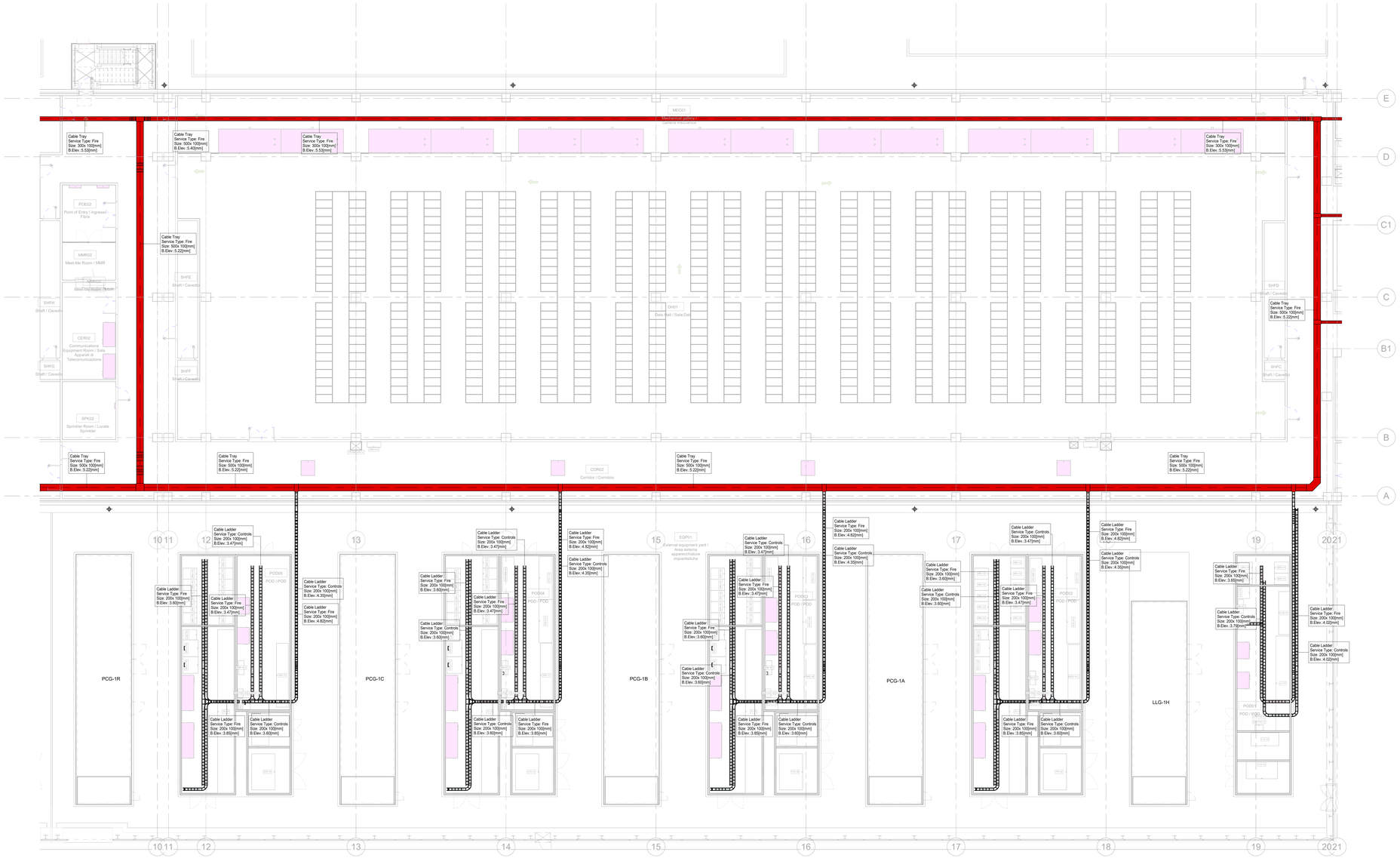

LEGEND/LEGENDA

Extra Low Voltage Containments

	Containments Extra Low Voltage, Ladder cable tray Ladder cable try with Sendzimir process, length of the single section m. 3.00, including fastening accessories - thickness 12/10 - Dimensions as indicated in the project Passerella metallica rettilinea a traversini in acciaio zincato con processo Sendzimir, lunghezza del singolo tratto m. 3.00, compresi accessori di fissaggio - spessore 12/10 - Dimensioni come indicate in progetto -
	Containments Extra Low Voltage, Ladder cable tray Solid bottom with Sendzimir process, single element length 3 m, blind or perforated bottom complete with cover for perforated or blind bottom channels, including fixing accessories - thickness 8/10 - Canale in acciaio zincato con processo Sendzimir, lunghezza del singolo elemento 3 m, a fondo cieco o forato completa di coperchio per canali a fondo forato o cieco, compresi accessori di fissaggio - spessore 8/10 -
	Fire Alarm Distribution
	Controls - BMS - Security distribution
	Mechanical Equipment - Attrezzature Meccanica

KEY PLAN

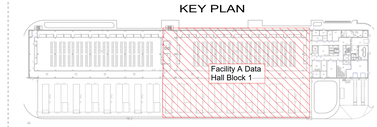

Il presente elaborato è valido solo in coordinamento con tutte le altre discipline specialistiche con le quali deve essere verificata la conformità. Tutte le misure ed eventuali variazioni rispetto al presente elaborato devono essere verificate in cantiere.
This plan only valid in connection & coordination with the plans of all other Specialist disciplines, and must be checked for conformity with these plans. Deviations in dimensions must be clarified with the site management.

CLIENT / COMMITTENTE:

STACK INFRASTRUCTURE

Project Name / Progetto:
STACK MIL07 Datacenter

Location / Indirizzo progetto:
Via Lombardia, 27010 Siziano PV

BIM Client Consultant / Consulente BIM del Cliente:
ARC:BIM
2nd Floor, 140 St John Street - London, GB

DESIGN TEAM / TEAM DI PROGETTO

CONSULTING DESIGNER / PROGETTISTA

ARCHITECTURAL DESIGN /
PROGETTO ARCHITETTONICO
Arch. Laura De Betto
DBA S.p.a.
Viale Liguria 24, Milano (MI)

STRUCTURAL DESIGN /
PROGETTO STRUTTURE
Ing. Diego Serafini
DBA S.p.A.
Viale G. G. Felissent 20D, Villorba (TV)

MECHANICAL DESIGN /
PROGETTO IMP. MECCANICI ED ELETTRICI
Ing. Sasha Buselli
DBA S.p.a
Via Natale Battaglia 10, Milano (MI)

ELECTRICAL DESIGN /
PROGETTO IMP. ELETTRICI E SPECIALI
Ing. Sasha Buselli
DBA S.p.a
Via Natale Battaglia 10, Milano (MI)

COORDINATION / COORDINAMENTO
PM - Alessandro Masiero
BIM Coordinator - F. Shahaj
BIM Coordinator - R. Sadeno

INTEGRATED DESIGN / PROGETTAZIONE COORDINATA:

DBA

DBA S.p.A
Sede legale:
Piazza Roma, 19
32043 S. Stefano di Cadore (BL)
P.IVA 01032130256
certificata **ISO 9001:2015** SINA: IL.06330.YS IQNet:IT-11610

Sede secondaria:
Viale Felissent, 20/D
31020 Villorba (TV)
Tel. 0422 1623500 - 1623600
www.dba.it - info@dba.it

PROJECT CODE	ORIGINATOR	FUNCTIONAL	SPACIAL B.	FORM	DISCIPLINE	TYPE	NUMBER
MIL07	DBA	A1	00	DR	E	64	101

NOTES / NOTE:

DBA PROJECT CODE	PROJECT STAGE	STATUS / STATO	REVISION / REVISIONE	DATE / DATA
13038001	WS3	S4	P01	07/11/25

REV.	REVISION DESCRIPTION / DESCRIZIONE REVISIONE	REVISION DATE
P01	S4 - Issue 2 Submittal	2011/126

Client / Committente: STACK INFRASTRUCTURE

Oggetto:
Elettrico
Distribuzione - Extra Bassa Tensione
Piano Terra (0G) Fase 1

Subject:
Electrical
Containments - Extra Low Voltage
Ground Floor (0G) Phase 1

PAPER SIZE / FORMATO: A0 +1 (841*1189)
SCALE / SCALA: 1:100
DRAWN / DISEGNATO: F.Shahaj
CHECKED / CONTROLLATO: S. Soncini
APPROVED / APPROVATO: S. Buselli

FILE NAME / NOME FILE: MIL07-DBA-A1-00-DR-E-6410-P01

PROPERTY OF DBA S.p.A. NON UTILIZZABILE O RIPLICABILE (ANCHE IN PARTE) SENZA CONSENSO SCRITTO DA PARTE DI DBA.

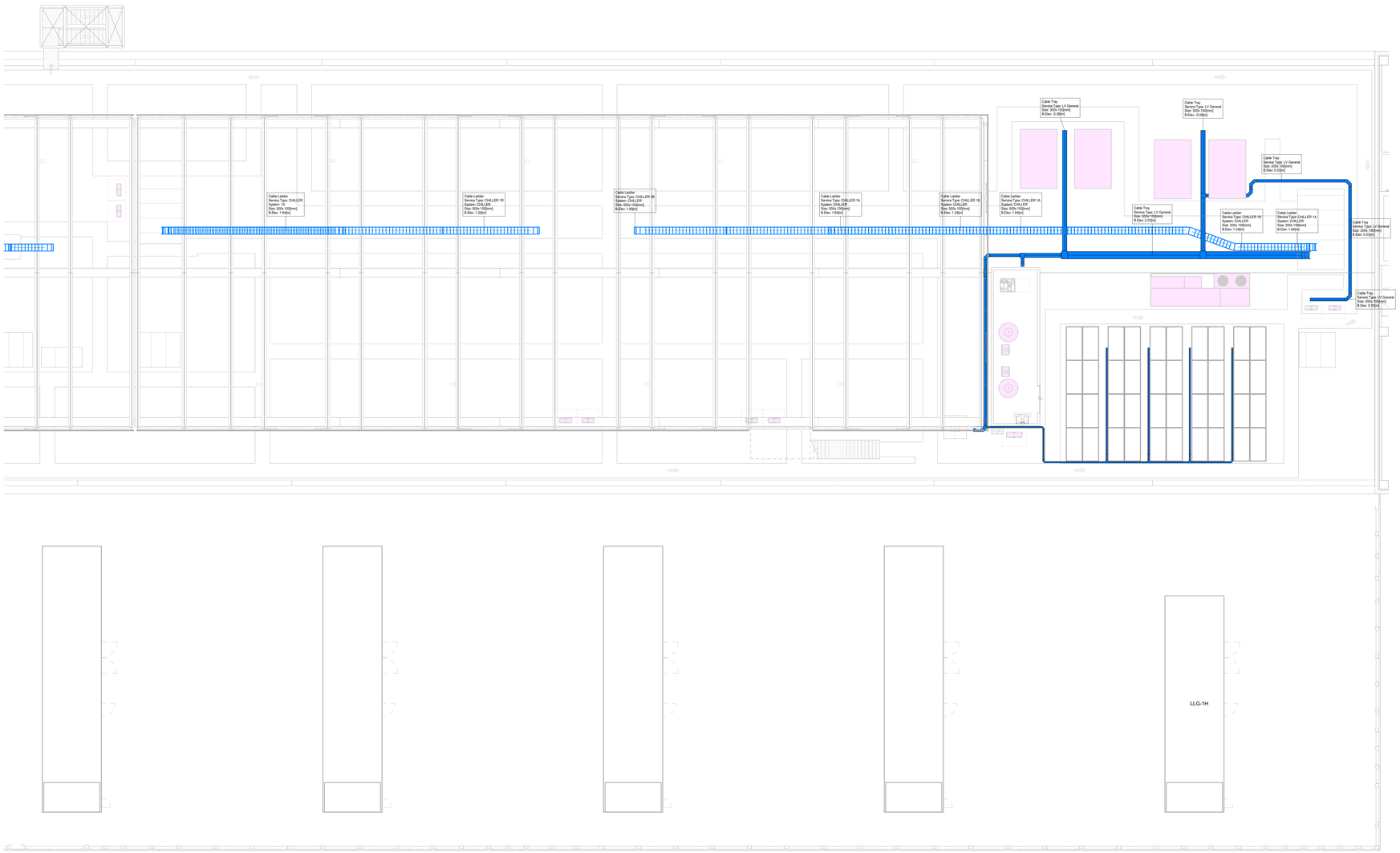

N

0 2 4 6 8 10m

LEGEND/LEGENDA

Distribuzione Bassa Tensione
Low Voltage Containments

Distribuzione Bassa tensione

Containments Low Voltage, Ladder cable tray
Ladder cable try with Sendzimir process, length of the single section m. 3.00, including fastening accessories - thickness 12/10 - Dimensions as indicated in the project

Passerella metallica rettilinea a traversini in acciaio zincato con processo Sendzimir, lunghezza del singolo tratto m. 3.00, compresi accessori di fissaggio - spessore 12/10 - Dimensioni come indicate in progetto -

Distribuzione Bassa tensione

Containments Low Voltage, Ladder cable tray

Solid bottom with Sendzimir process, single element length 3 m, blind or perforated bottom complete with cover for perforated or blind bottom channels, including fixing accessories - thickness 8/10 -

Canale in acciaio zincato con processo Sendzimir, lunghezza del singolo elemento 3 m, a fondo cieco o forato completa di coperchio per canali a fondo forato o cieco, compresi accessori di fissaggio - spessore 8/10

LV Conduit outside diameter Ø 110 mm / Cavidotti Bassa Tensione diametro esterno Ø 110 mm

Electrical LV Pit 2.00x2.00x1.50 m
Pozzetto d'ispezione Bassa Tensione dimensioni 2.00 x 2.00 x 1.50 m

Mechanical Equipment / Attrezzature Meccanica

KEY PLAN

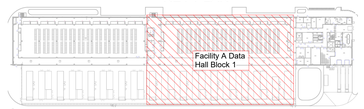

Il presente elaborato è valido solo in coordinamento con tutte le altre discipline specialistiche con le quali deve essere verificata la conformità. Tutte le misure ed eventuali variazioni rispetto al presente elaborato devono essere verificate in cantiere.
This plan only valid in connection & coordination with the plans of all other Specialist disciplines, and must be checked for conformity with these plans. Deviations in dimensions must be clarified with the site management.

CLIENT / COMMITTENTE:

STACK INFRASTRUCTURE

Progetto/Project
STACK MIL07 Datacenter

Location / Indirizzo progetto
Via Lombardia, 27010 Siziano PV

BIM Client Consultant / Consulente BIM del Cliente
ARC:BIM
2nd Floor, 140 St John Street - London, GB

ARC:BIM

DESIGN TEAM / TEAM DI PROGETTO

CONSULTING DESIGNER / PROGETTISTA

ARCHITECTURAL DESIGN /
PROGETTO ARCHITETTONICO
Arch. Daniele De Bettin
DBA S.p.A.
Viale Liguria 24, Milano (MI)

STRUCTURAL DESIGN /
PROGETTO STRUTTURE
Ing. Diego Serafini
DBA S.p.A.
Viale G. G. Felissent 20D, Vittorio (TV)

MECHANICAL DESIGN /
PROGETTO IMP. MECCANICI ED ELETTRICI
Ing. Sacha Busetti
DBA S.p.A.
Via Natale Battaglia 10, Milano (MI)

ELECTRICAL DESIGN /
PROGETTO IMP. ELETTRICI E SPECIALI
Ing. Sacha Busetti
DBA S.p.A.
Via Natale Battaglia 10, Milano (MI)

COORDINATION / COORDINAMENTO
PM - *Alessandro Masiero*
BIM Manager - *S. Di Biase*
BIM Coordinator - *R. Sodano*

INTEGRATED DESIGN / PROGETTAZIONE COORDINATA:

DBA

DBA S.p.A.
Sede legale:
Via Natale Battaglia, 10
52045 S. Stefano di Cadore (BL)
tel +39 0437 94111
certificata ISO 9001-2015

Sede secondaria:
Viale Felissent, 20/D
31020 Vittorile (TV)
tel +39 0438 1890111
STDA - 2/2023/01-CDM-v.1.0 - 108410

PROJECT CODE	ORIGINATOR	FUNCTIONAL	SPACIAL S.	FORM	DISCIPLINE	TYPE	NUMBER
MIL07	DBA	A1	R1	DR	E	61	201

NOTES / NOTE:

DBA PROJECT CODE	PROJECT STAGE	STATUS / STATO	REVISION / REVISIONE	DATE / DATA
13038001	WS3	S4	P01	07/11/25

REV	S4 - Rilav 3 Submittal	07/11/25
REV.	REVISION DESCRIPTION / DESCRIZIONE REVISIONE	REVISION DATE

Client / Committente: STACK INFRASTRUCTURE

Oggetto:
Elettrico
Distribuzione - Bassa Tensione
Copertura (R1) Fase 1
Subject:
Electrical
Containments - Low Voltage
Roof (R1) Phase 1

SIZE / FORMATO: A0 +1 [841*1189]
SCALE / SCALA: As indicated
DRAWN / DISEGNATO: F.Shahaj
CHECKED / CONTROLLATO: S. Soncini
APPROVED / APPROVATO: S. Busetti

FILE NAME / NOME FILE: MIL07-DBA-A1-R1-DR-E-61201.P01

PROPERTY OF DBA S.p.A. NON UTILIZZABILE O REPLICABILE (ANCHE IN PARTE) SENZA CONSENSO SCRITTO DA PARTE DI DBA.

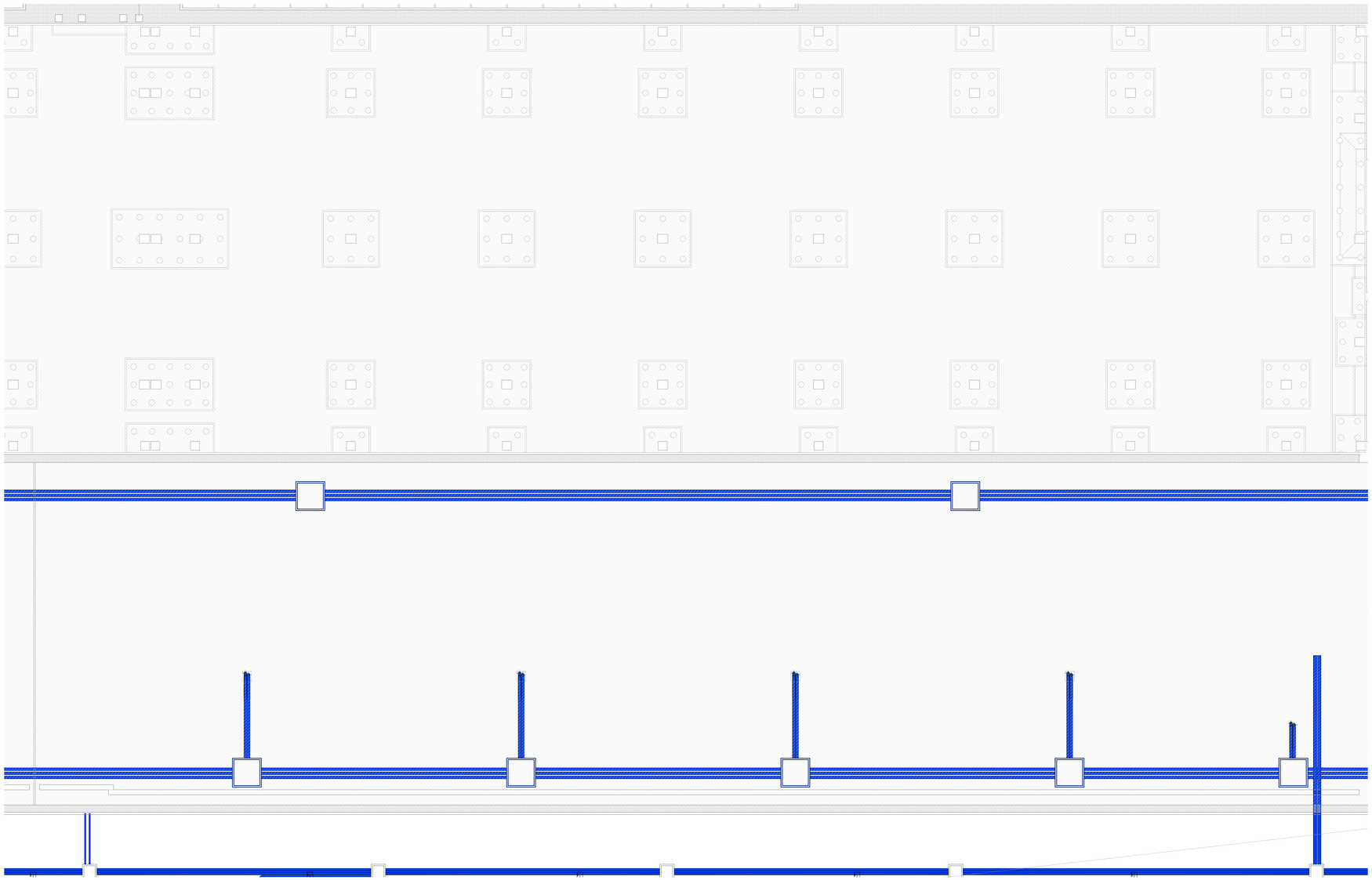

0 2 4 6 8 10m

LEGEND/LEGENDA

MV Containments
Distribuzione Media Tensione

MV Cable Containments
Distribuzione canale MV

Cavidotti Media Tensione diametro 200mm
MV Cable Conduit diameter 200mm

Pozzetto in cemento dim. 2,00m x 2,00m
Concrete manhole dim. 2,00m x 2,00m

Cable trays tag:
Cable tray type: Ladder, Solid bottom, Mesh etc
Service type: MV, LV, Fire, CTRL etc
System: MV, PV, chiller, 1A, 1B etc
Size: dimension WxH [mm]
B.Elev: bottom elevation of the tray in meter

Cable Ladder
Service Type: MV
System: MV
Size: 400x 100[mm]
B.Elev: 3.05[m]

Il presente elaborato è valido solo in coordinamento con tutte le altre discipline specialistiche con le quali deve essere verificata la conformità. Tutte le misure ed eventuali variazioni rispetto al presente elaborato devono essere verificate in cantiere.
This plan only valid in connection & coordination with the plans of all other Specialist disciplines, and must be checked for conformity with these plans. Deviations in dimensions must be clarified with the site management.

CLIENT / COMMITTENTE:

STACK INFRASTRUCTURE

Project Name / Progetto:
STACK MIL07 Datacenter

Location / Indirizzo progetto:
Via Lombardia, 27010 Siziano PV

BIM Client Consultant / Consulente BIM del Cliente
ARC:BIM
2nd Floor, 140 St John Street - London, GB

DESIGN TEAM / TEAM DI PROGETTO

CONSULTING DESIGNER / PROGETTISTA

ARCHITECTURAL DESIGN /
PROGETTO ARCHITETTONICO
Arch. Daniele De Bettin
DBA S.p.A.
Viale Liguria 24, Milano (MI)

STRUCTURAL DESIGN /
PROGETTO STRUTTURE
Ing. Diego Serafini
DBA S.p.A.
Viale G. G. Felissent 20D, Vittorio (TV)

MECHANICAL DESIGN /
PROGETTO IMP. MECCANICI ED ELETTRICI
Ing. Sacha Busetti
DBA S.p.A.
Via Natale Battaglia 10, Milano (MI)

ELECTRICAL DESIGN /
PROGETTO IMP. ELETTRICI E SPECIALI
Ing. Sacha Busetti
DBA S.p.A.
Via Natale Battaglia 10, Milano (MI)

COORDINATION / COORDINAMENTO
PM - *Alessandro Maiaero*
BIM Manager - *S. Di Biase*
BIM Coordinator - *R. Sodano*

INTEGRATED DESIGN / PROGETTAZIONE COORDINATA:

DBA

DBA S.p.A.
Sede legale:
Piazza Alpini, 19
32043 S. Stefano di Cadore (BL)
P.IVA: IT01035670025
certificato ISO 9001:2015 SGQ n. 50221/03/S Cofano LT-108/15

Sede secondaria:
Viale Felissent, 20/D
31020 Villorba (TV)
Tel. +39 0422 919191
www.dba.it - info@dba.it

PROJECT CODE	ORIGINATOR	FUNCTIONAL	SPACIAL B.	FORM	DISCIPLINE	TYPE	NUMBER
MIL07	DBA	A1	UG	DR	E	59	001

NOTES / NOTE:

DBA PROJECT CODE	PROJECT STAGE	STATUS / STATO	REVISION / REVISIONE	DATE / DATA
13038001	WS3	S4	P01	07/11/25

REV.	Ed. / Rilas.3 Subnotar	2011/28
REV.	REVISION DESCRIPTION / DESCRIZIONE REVISIONE	REVISION DATE

Client / Committente: STACK INFRASTRUCTURE

Oggetto:
Elettrico
Layout Distribuzione Media Tensione Critica
Fondazioni Blocco 1

Subject:
Electrical
MV Containments
Underground Block 1

SIZE / FORMATO	A0 +1 [841*1189]
SCALE / SCALA	1:100
DRAWN / REDATTO	D. Toffali
CHECKED / CONTROLLATO	S. Soncini
APPROVED / APPROVATO	S. Busetti
DATE / DATA	05/12/2025

FILE NAME / NOME FILE: MIL07-DBA-A1-UG-DR-E-59001.P01

PROPERTY OF DBA S.p.A. NON UTILIZZABILE O REPLICABILE (ANCHE IN PARTE) SENZA CONSENSO SCRITTO DA PARTE DI DBA.

DBA S.p.A. Società soggetta alla direzione e coordinamento di Longitude S.S.R. S.r.l. Società soggetta alla direzione e coordinamento di Longitude Capital Partners Fund III L.P. Ai sensi del D.Lgs. 196 del 30 giugno 2003 e del GDPR 679/2016 si informa che il presente documento contiene informazioni riservate e/o protette legalmente. Qualora non fosse il destinatario del presente documento, la sua diffusione, distribuzione o copia è vietata. The information in this drawing is privileged and confidential, and the unauthorised use of this drawing or parts of it is prohibited and may be unlawful under the GDPR 679/2016 and Legislative Decree 196 of June 30, 2003.

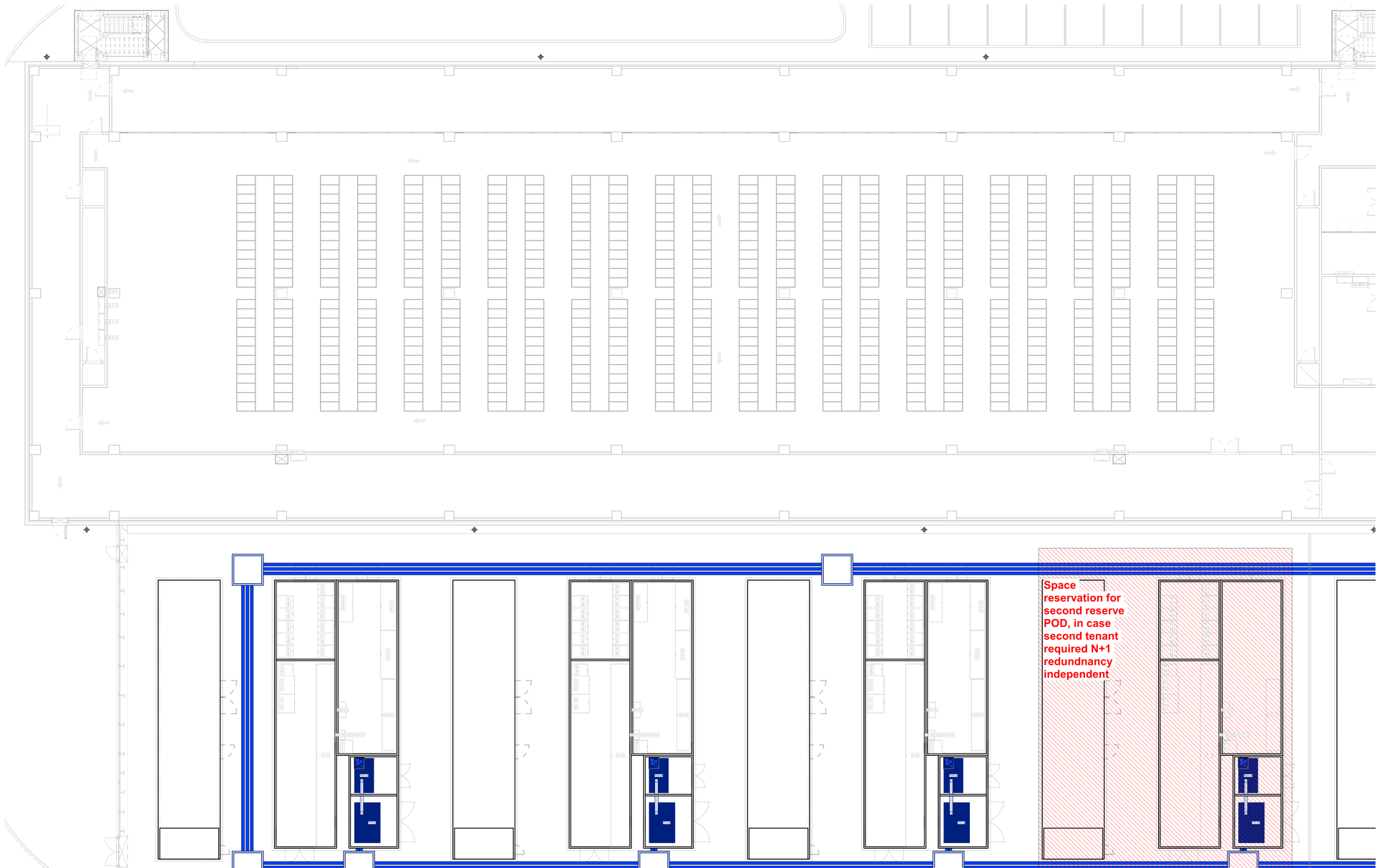

0 2 4 6 8 10m

LEGEND/LEGENDA

MV Containments
Distribuzione Media Tensione

	MV Cable Containments Distribuzione canale MV
	Cavidotti Media Tensione diametro 200mm MV Cable Conduit diameter 200mm
	Pozzetto in cemento dim. 2,00m x 2,00m Concrete manhole dim. 2,00m x 2,00m

Cable trays tag:
Cable tray type: Ladder, Solid bottom, Mesh etc
Service type: MV, LV, Fire, CTRL etc
System: MV, PV, chiller, 1A, 1B etc
Size: dimension WxH [mm]
B.Elev: bottom elevation of the tray in meter

Cable Ladder
Service Type: MV
System: MV
Size: 400x 100[mm]
B.Elev: 3.05[m]

Il presente elaborato è valido solo in coordinamento con tutte le altre discipline specialistiche con le quali deve essere verificata la conformità. Tutte le misure ed eventuali variazioni rispetto al presente elaborato devono essere verificate in cantiere.
This plan only valid in connection & coordination with the plans of all other Specialist disciplines, and must be checked for conformity with these plans. Deviations in dimensions must be clarified with the site management.

CLIENT / COMMITTENTE:

STACK INFRASTRUCTURE

Project Name / Progetto:
STACK MIL07 Datacenter

Location / Indirizzo progetto:
Via Lombardia, 27010 Siziano PV

BIM Client Consultant / Consulente BIM del Cliente
ARC:BIM
2nd Floor, 149 St John Street - London, GB

ARC:BIM

DESIGN TEAM / TEAM DI PROGETTO

CONSULTING DESIGNER / PROGETTISTA

ARCHITECTURAL DESIGN /
PROGETTO ARCHITETTONICO
Arch. Daniele De Bettin
DBA S.p.A.
Viale Liguria 24, Milano (MI)

STRUCTURAL DESIGN /
PROGETTO STRUTTURE
Ing. Diego Serafini
DBA S.p.A.
Viale G. G. Felissent 20D, Villorba (TV)

MECHANICAL DESIGN /
PROGETTO IMP. MECCANICI ED ELETTRICI
Ing. Sacha Busetti
DBA S.p.A.
Via Natale Battaglia 10, Milano (MI)

ELECTRICAL DESIGN /
PROGETTO IMP. ELETTRICI E SPECIALI
Ing. Sacha Busetti
DBA S.p.A.
Via Natale Battaglia 10, Milano (MI)

COORDINATION / COORDINAMENTO
PM - *Alessandro Masiero*
BIM Manager - *S. Di Biase*
BIM Coordinator - *R. Sodano*

INTEGRATED DESIGN / PROGETTAZIONE COORDINATA:

DBA

DBA S.p.A.
Sede legale:
Via Cal Di Rocca, 19
32043 S. Stefano di Cadore (BL)
tel. +39 0422.693511
certificato **ISO 9001:2015** RINA n.5923/01/S Cgmed n.7-1951/S

Sede secondaria:
Viale Giuseppe Garibaldi, 2
31020 Villorba (TV)
tel. +39 0422.693511

PROJECT CODE	ORIGINATOR	FUNCTIONAL	SPACIAL B.	FORM	DISCIPLINE	TYPE	NUMBER
MIL07	DBA	A2	00	DR	E	59	102

NOTES / NOTE:

DBA PROJECT CODE	PROJECT STAGE	STATUS / STATO	REVISION / REVISIONE	DATE / DATA
13038001	WS3	S4	P01	07/11/25

REV.	REVISION DESCRIPTION / DESCRIZIONE REVISIONE	REVISION DATE
P01	S4 - Riba 3 Submittal	(07/11/25)

Client / Committente
STACK INFRASTRUCTURE

Oggetto:
Elettrico
Distribuzione - Media Tensione
Piano Terra Blocco 2
Subject:
Electrical
MV Containments
Ground Floor Block 2

SIZE / FORMATO: A0 [841*1189]
SCALE / SCALA: 1:100
DRAWN / REDATTO: D. Toffali
CHECKED / CONTROLLATO: S. Soncini
APPROVED / APPROVATO: S. Busetti

FILE NAME / NOME FILE: MIL07-DBA-A2-00-DR-E-59102.P01

DBA S.p.A. Tutti i diritti relativi ai disegni, copyright, marchi e brevetti di DBA S.p.A. Il disegno è di proprietà di DBA S.p.A. Il disegno, la sua copia e il contenuto non possono essere riprodotti o trasmessi a terzi senza il nostro consenso scritto. The drawing is the property of DBA S.p.A. The drawing, its copy and the contents must not be reproduced or transmitted to third parties without our written consent.
DBA S.p.A. Ogni utilizzo del presente elaborato non conforme alla sua destinazione è proibito e ne sarà perseguito il relativo danno a termine di legge. Any use of this document not in accordance with its intended purpose is prohibited and will be prosecuted to the extent of the law.

PROPERTY OF DBA S.p.A. NON UTILIZZABILE O REPLICABILE (ANCHE IN PARTE) SENZA CONSENSO SCRITTO DA PARTE DI DBA.

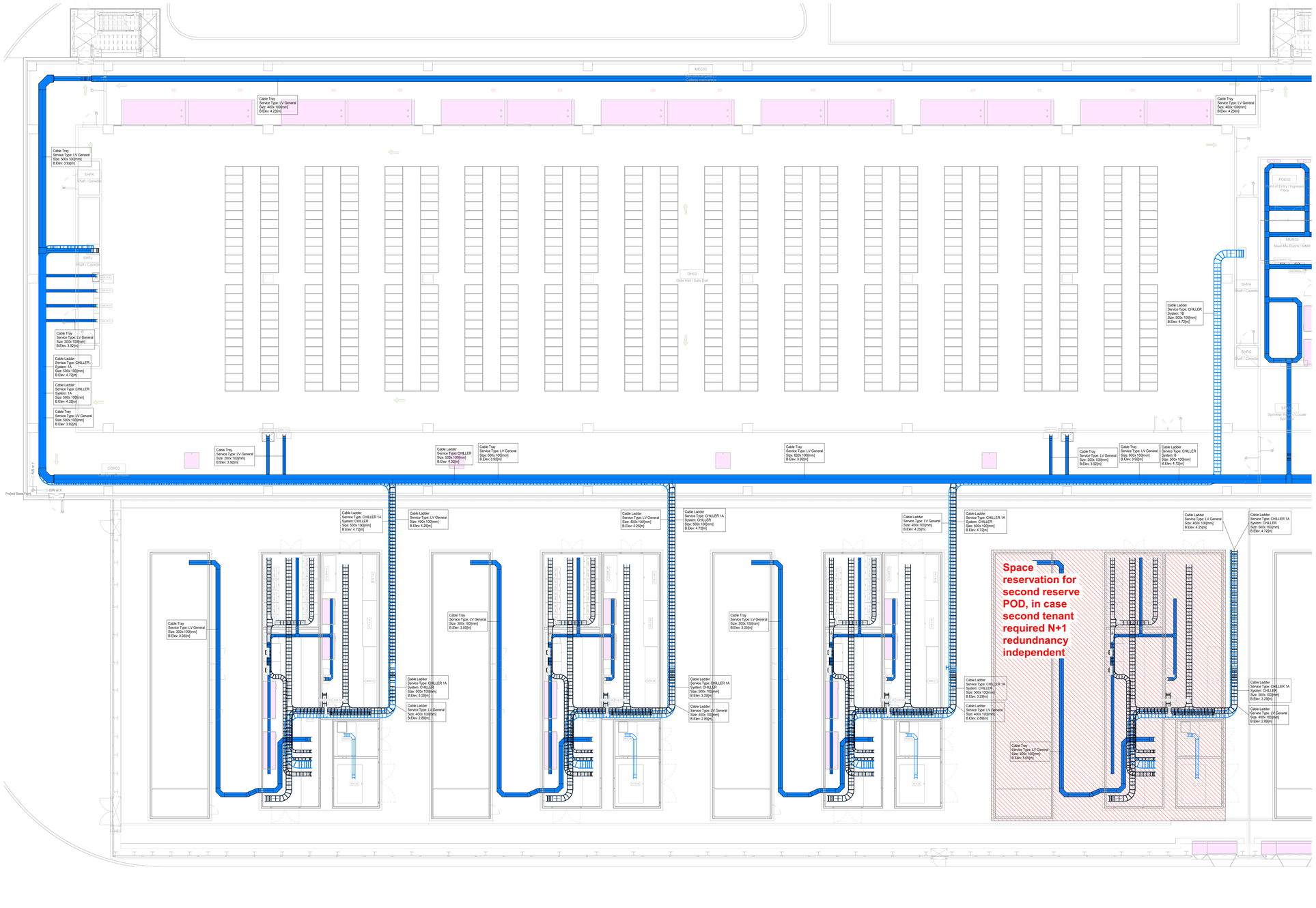

0 2 4 6 8 10m

LEGEND/LEGENDA

Distribuzione Bassa Tensione
Low Voltage Containments

Distribuzione Bassa tensione

Containments Low Voltage, Ladder cable tray
Ladder cable try with Sendzimir process, length of the single section m. 3.00, including fastening accessories - thickness 12/10 - Dimensions as indicated in the project

Passerella metallica rettilinea a traversini in acciaio zincato con processo Sendzimir, lunghezza del singolo tratto m. 3,00, compresi accessori di fissaggio - spessore 12/10 - Dimensioni come indicate in progetto -

Distribuzione Bassa tensione

Containments Low Voltage, Ladder cable tray

Solid bottom with Sendzimir process, single element length 3 m, blind or perforated bottom complete with cover for perforated or blind bottom channels, including fixing accessories - thickness 8/10 -

Canale in acciaio zincato con processo Sendzimir, lunghezza del singolo elemento 3 m, a fondo cieco o forato completa di coperchio per canali a fondo forato o cieco, compresi accessori di fissaggio - spessore 8/10

LV Conduit outside diameter Ø 110 mm / Cavidotti Bassa Tensione diametro esterno Ø 110 mm

Electrical LV Pit 2.00x2.00x1.50 m
Pozzetto d'ispezione Bassa Tensione dimensioni 2.00 x 2.00 x 1.50 m

Mechanical Equipment / Attrezzature Meccanica

Il presente elaborato è valido solo in coordinamento con tutte le altre discipline specialistiche con le quali deve essere verificata la conformità. Tutte le misure ed eventuali variazioni rispetto al presente elaborato devono essere verificate in cantiere.
This plan only valid in connection & coordination with the plans of all other Specialist disciplines, and must be checked for conformity with these plans. Deviations in dimensions must be clarified with the site management.

CLIENT / COMMITTENTE:

STACK INFRASTRUCTURE

Project Name / Progetto:
STACK MIL07 Datacenter

Location / Indirizzo progetto:
Via Lombardia, 27010 Siziano PV

BIM Client Consultant / Consulente BIM del Cliente
ARC:BIM
2nd Floor, 140 St John Street - London, GB

ARC:BIM

DESIGN TEAM / TEAM DI PROGETTO

CONSULTING DESIGNER / PROGETTISTA

ARCHITECTURAL DESIGN /
PROGETTO ARCHITETTONICO
Arch. Daniele De Bettin
DBA S.p.A.
Viale Liguria 24, Milano (MI)

STRUCTURAL DESIGN /
PROGETTO STRUTTURE
Ing. Diego Serafini
DBA S.p.A.
Viale G. G. Felissent 20D, Villorba (TV)

MECHANICAL DESIGN /
PROGETTO IMP. MECCANICI ED ELETTRICI
Ing. Sacha Busetti
DBA S.p.A.
Via Natale Battaglia 10, Milano (MI)

ELECTRICAL DESIGN /
PROGETTO IMP. ELETTRICI E SPECIALI
Ing. Sacha Busetti
DBA S.p.A.
Via Natale Battaglia 10, Milano (MI)

COORDINATION / COORDINAMENTO
PM - *Alessandro Masiero*
BIM Manager - *S. Di Biase*
BIM Coordinator - *R. Sodano*

INTEGRATED DESIGN / PROGETTAZIONE COORDINATA

DBA

DBA S.p.A.
Sede legale:
Piazza Roma, 19
32045 S. Stefano di Cadore (BL)
tel. +39 0422 693511
certificato **ISO 9001:2015** RINA n.592335/S Cgher n.IT-10610

Sede secondaria:
Viale Felissent, 20/C
31020 Villorba (TV)
tel. +39 0422 693511

PROJECT CODE	ORIGINATOR	FUNCTIONAL	SPACIAL B.	FORM	DISCIPLINE	TYPE	NUMBER
MIL07	DBA	A2	00	DR	E	61	102

NOTES / NOTE:

DBA PROJECT CODE	PROJECT STAGE	STATUS / STATO	REVISION / REVISIONE	DATE / DATA
13038001	WS3	S4	P01	07/11/25

REV.	REVISION DESCRIPTION / DESCRIZIONE REVISIONE	REVISION DATE
P01	S4 - Riba 3 Submittal	07/11/25

Client / Committente: STACK INFRASTRUCTURE

Oggetto:
Elettrico
Distribuzione - Bassa Tensione
Piano Terra (0G) Fase 2

Subject:
Electrical
Containments - Low Voltage
Ground Floor (0G) Phase 2

SIZE / FORMATO: A0 (841*1189)
SCALE / SCALA: As indicated
DRAWN / REDATTO: F.Shahaj
CHECKED / CONTROLLATO: S. Soncini
APPROVED / APPROVATO: S. Busetti

FILE NAME / NOME FILE: MIL07-DBA-A2-00-DR-E-61102.P01

DBA S.p.A. ha redatto il presente elaborato nel rispetto della vigente normativa sul diritto di autore. Il presente elaborato è proprietà di DBA S.p.A. e non può essere utilizzato per scopi diversi da quelli per i quali è stato redatto. Il presente elaborato non può essere copiato o reso noto a terzi senza il preventivo consenso di DBA S.p.A.
DBA S.p.A. owns the copyright on this document. This document is the property of DBA S.p.A. and may not be used for purposes other than those for which it was drawn. This document may not be copied or disclosed to third parties without the prior written consent of DBA S.p.A.

PROPERTY OF DBA S.p.A. NON UTILIZZABILE O REPLICABILE (ANCHE IN PARTE) SENZA CONSENSO SCRITTO DA PARTE DI DBA.

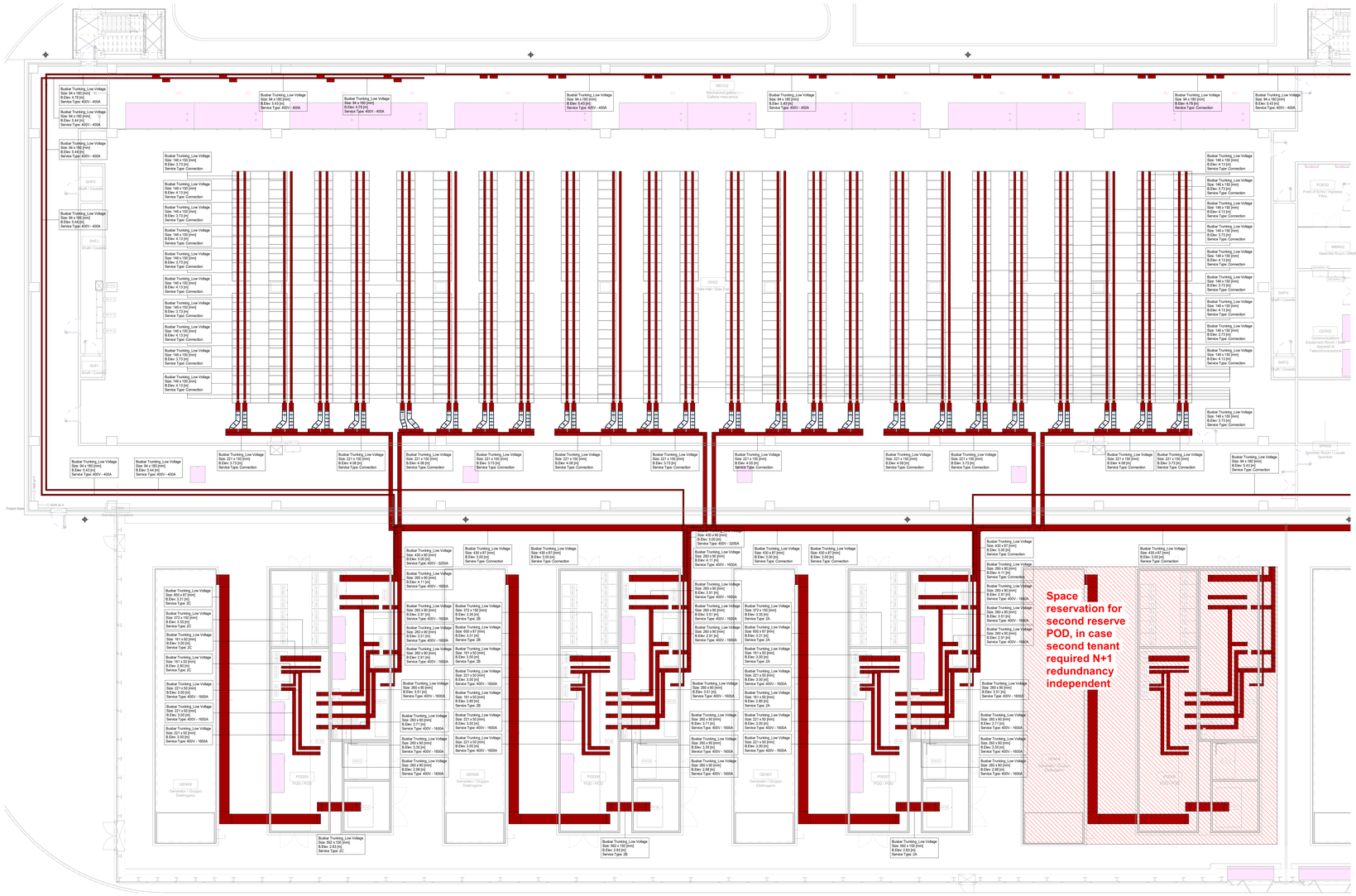
Busbar Trunking_Low Voltage
Size: 94 x 180 [mm]
B.Elev: 5.43 [m]
Service Type: 400V - 400A
Busbar Trunking_Low Voltage
Size: 94 x 180 [mm]
B.Elev: 4.78 [m]
Service Type: 400V - 405A
Busbar Trunking_Low Voltage
Size: 140 x 100 [mm]
B.Elev: 3.73 [m]
Service Type: Connection
Busbar Trunking_Low Voltage
Size: 221 x 100 [mm]
B.Elev: 4.08 [m]
Service Type: Connection
Busbar Trunking_Low Voltage
Size: 430 x 87 [mm]
B.Elev: 3.00 [m]
Service Type: Connection
Busbar Trunking_Low Voltage
Size: 260 x 90 [mm]
B.Elev: 2.91 [m]
Service Type: 400V - 1600A
Busbar Trunking_Low Voltage
Size: 260 x 90 [mm]
B.Elev: 2.91 [m]
Service Type: 2C
Busbar Trunking_Low Voltage
Size: 161 x 50 [mm]
B.Elev: 2.80 [m]
Service Type: 2C
Busbar Trunking_Low Voltage
Size: 221 x 50 [mm]
B.Elev: 3.00 [m]
Service Type: 400V - 1600A
Busbar Trunking_Low Voltage
Size: 260 x 90 [mm]
B.Elev: 2.91

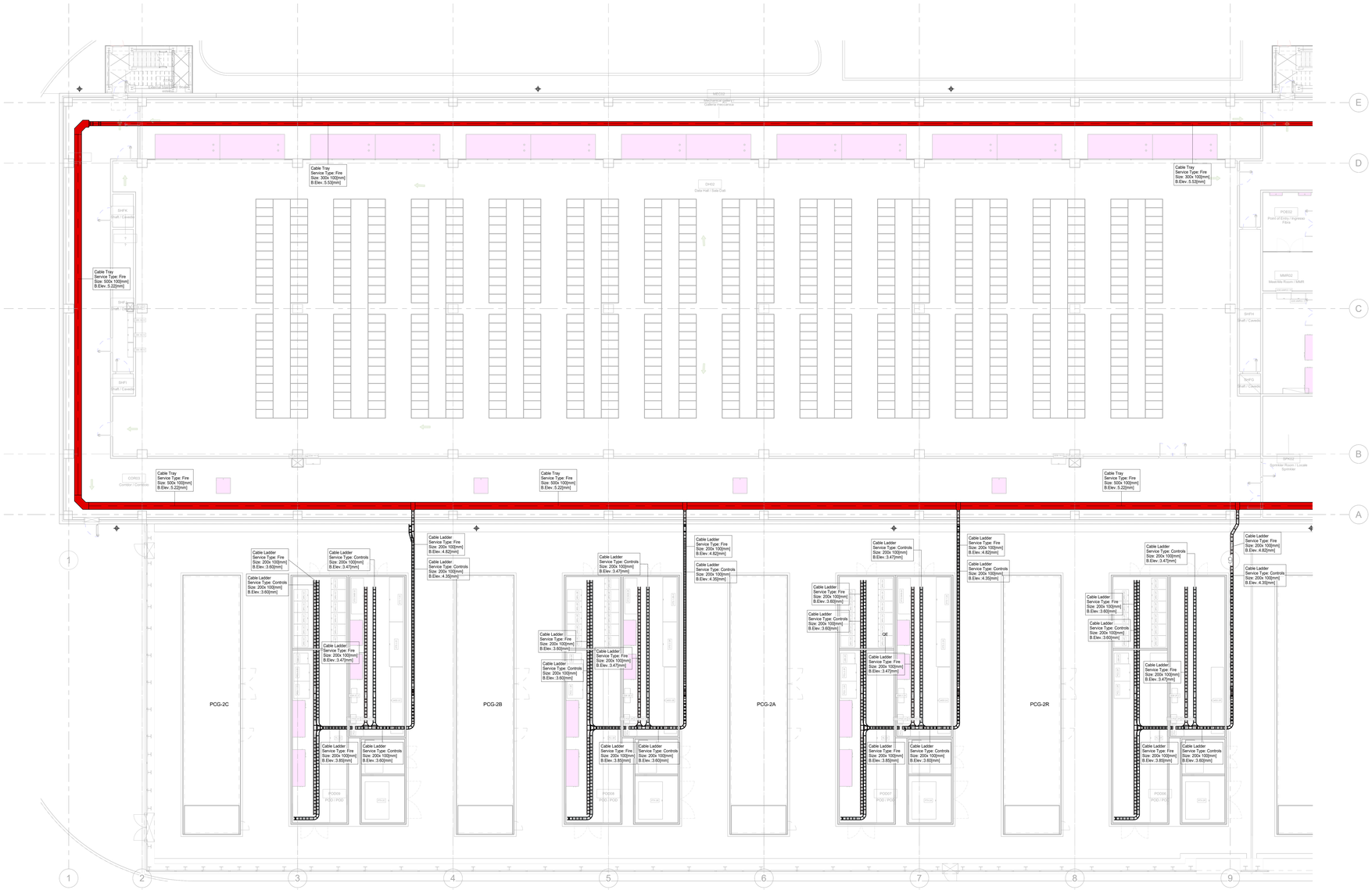

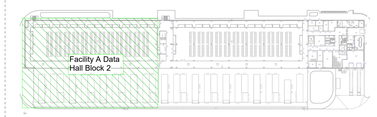

Il presente elaborato è valido solo in coordinamento con tutte le altre discipline specialistiche con le quali deve essere verificata la conformità. Tutte le misure ed eventuali variazioni rispetto al presente elaborato devono essere verificate in cantiere.
This plan only valid in connection & coordination with the plans of all other Specialist disciplines, and must be checked for conformity with these plans. Deviations in dimensions must be clarified with the site management.

LEGEND/LEGENDA

Extra Low Voltage Containments

Containments Extra Low Voltage, Ladder cable tray
Ladder cable try with Sendzimir process, length of the single section m. 3.00, including fastening accessories - thickness 12/10 - Dimensions as indicated in the project

Passerella metallica rettilinea a traversini in acciaio zincato con processo Sendzimir, lunghezza del singolo tratto m. 3.00, compresi accessori di fissaggio - spessore 12/10 - Dimensioni come indicate in progetto -

Containments Extra Low Voltage, Ladder cable tray

Solid bottom with Sendzimir process, single element length 3 m, blind or perforated bottom complete with cover for perforated or blind bottom channels, including fixing accessories - thickness 8/10 -

Canale in acciaio zincato con processo Sendzimir, lunghezza del singolo elemento 3 m, a fondo cieco o forato completa di coperchio per canali a fondo forato o cieco, compresi accessori di fissaggio - spessore 8/10 -

Fire Alarm Distribution

Controls - BMS - Security distribution

Mechanical Equipment - Attrezzature Meccanica

CLIENT / COMMITTENTE:

STACK INFRASTRUCTURE

Progetto Nuovo Cliente / Project Name
STACK MIL07 Datacenter

Location / Indirizzo progetto
Via Lombardia, 27010 Siziano PV

BIM Client Consultant / Consulente BIM del Cliente
ARC:BIM
2nd Floor, 140 St John Street - London, GB

DESIGN TEAM / TEAM DI PROGETTO

CONSULTING DESIGNER / PROGETTISTA

ARCHITECTURAL DESIGN / PROGETTO ARCHITETTONICO
Arch. Daniele De Bettin
DBA S.p.A.
Viale Liguria 24, Milano (MI)

STRUCTURAL DESIGN / PROGETTO STRUTTURE
Ing. Diego Serafini
DBA S.p.A.
Viale G. G. Felissent 20D, Villorba (TV)

MECHANICAL DESIGN / PROGETTO IMP. MECCANICI ED ELETTRICI
Ing. Sacha Busetti
DBA S.p.A.
Via Natale Battaglia 10, Milano (MI)

ELECTRICAL DESIGN / PROGETTO IMP. ELETTRICI E SPECIALI
Ing. Sacha Busetti
DBA S.p.A.
Via Natale Battaglia 10, Milano (MI)

COORDINATION / COORDINAMENTO
PM - *Alessandro Maiaroni*
BIM Manager - *S. Di Biase*
BIM Coordinator - *R. Sodano*

INTEGRATED DESIGN / PROGETTAZIONE COORDINATA:

DBA S.p.A.
Sede legale: Piazza Roma, 19 36100 Vicenza (VI) Italy
tel. +39.0522.693311
certificata ISO 9001:2015 RINA n.5923/01/S IQNet n.IT-1181/10
Sede secondaria: Viale Felissent, 20/D 31020 Villorba (TV) Italy
tel. +39.0422.916511

PROJECT CODE	ORIGINATOR	FUNCTIONAL	SPACIAL B.	FORM	DISCIPLINE	TYPE	NUMBER
MIL07	DBA	A2	00	DR	E	64	102

NOTES / NOTE:

DBA PROJECT CODE	PROJECT STAGE	STATUS / STATO	REVISION / REVISIONE	DATE / DATA
13038001	WS3	S4	P01	07/11/25

REV.	REVISION DESCRIPTION / DESCRIZIONE REVISIONE	REVISION DATE
P01	S4 - Rilev 3 Subnidal	2011/25
REV. 0		

Client / Committente: STACK INFRASTRUCTURE

Oggetto:
Elettrico
Distribuzione - Extra Bassa Tensione
Piano Terra (0G) Fase 1

Subject:
Electrical
Containments - Extra Low Voltage
Ground Floor (0G) Phase 2

SIZE / FORMATO: A0 +1 (841*1189)
SCALE / SCALA: As indicated
DRAWN / REDATTO:
CHECKED / CONTROLLATO: S. Sorcini
APPROVED / APPROVATO: S. Busetti

FILE NAME / NOME FILE: MIL07-DBA-A2-00-DR-E-64102.P01

PROPERTY OF DBA S.p.A. NON UTILIZZABILE O RIPRODUCIBILE (ANCHE IN PARTE) SENZA CONSENSO SCRITTO DA PARTE DI DBA.

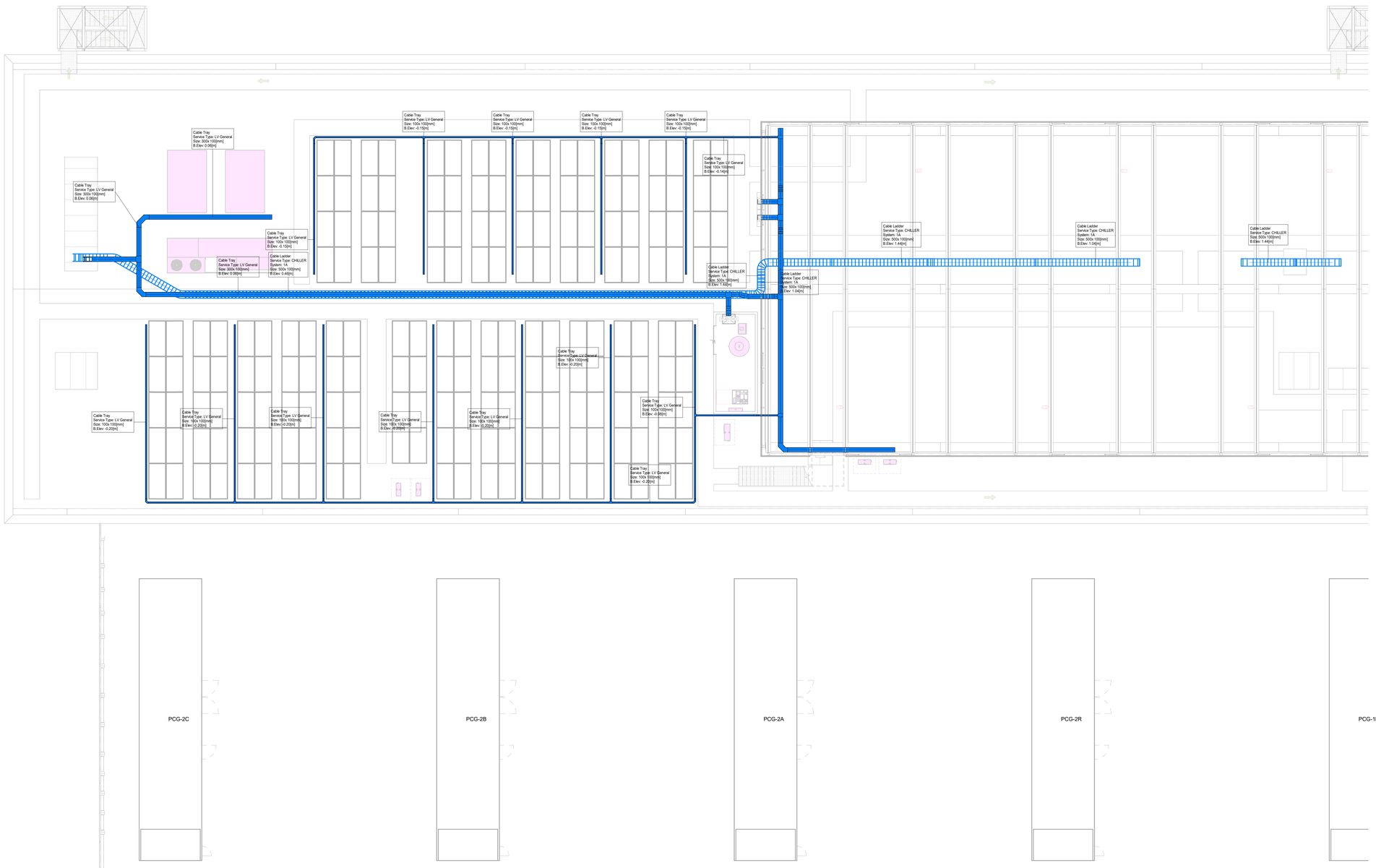

LEGEND/LEGENDA

Distribuzione Bassa Tensione
Low Voltage Containments

Distribuzione Bassa tensione

Containments Low Voltage, Ladder cable tray Ladder cable try with Sendzimir process, length of the single section m. 3.00, including fastening accessories - thickness 12/10 - Dimensions as indicated in the project

Passerella metallica rettilinea a traversini in acciaio zincato con processo Sendzimir, lunghezza del singolo tratto m. 3,00, compresi accessori di fissaggio - spessore 12/10 - Dimensioni come indicate in progetto -

Distribuzione Bassa tensione

Containments Low Voltage, Ladder cable tray

Solid bottom with Sendzimir process, single element length 3 m, blind or perforated bottom complete with cover for perforated or blind bottom channels, including fixing accessories - thickness 8/10 -

Canale in acciaio zincato con processo Sendzimir, lunghezza del singolo elemento 3 m, a fondo cieco o forato completa di coperchio per canali a fondo forato o cieco, compresi accessori di fissaggio - spessore 8/10

LV Conduit outside diameter Ø 110 mm / Cavidotti Bassa Tensione diametro esterno Ø 110 mm

Electrical LV Pit 2.00x2.00x1.50 m
Pozzetto d'ispezione Bassa Tensione dimensioni 2.00 x 2.00 x 1.50 m

Mechanical Equipment / Attrezzature Meccanica

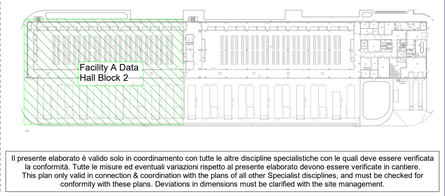

Il presente elaborato è valido solo in coordinamento con tutte le altre discipline specialistiche con le quali deve essere verificata la conformità. Tutte le misure ed eventuali variazioni rispetto al presente elaborato devono essere verificate in cantiere.
This plan only valid in connection & coordination with the plans of all other Specialist disciplines, and must be checked for conformity with these plans. Deviations in dimensions must be clarified with the site management.

CLIENT / COMMITTENTE:

STACK INFRASTRUCTURE

Project Name / Progetto:
STACK MIL07 Datacenter

Location / Indirizzo progetto:
Via Lombardia, 27010 Siziano PV

BIM Client Consultant / Consulente BIM del Cliente
ARC:BIM
2nd Floor, 140 St John Street - London, GB

ARC:BIM

DESIGN TEAM / TEAM DI PROGETTO

CONSULTING DESIGNER / PROGETTISTA

ARCHITECTURAL DESIGN /
PROGETTO ARCHITETTONICO
Arch. Daniele De Bettin
DBA S.p.A.
Viale Liguria 24, Milano (MI)

STRUCTURAL DESIGN /
PROGETTO STRUTTURE
Ing. Diego Serafini
DBA S.p.A.
Viale G. G. Felissent 20D, Villorba (TV)

MECHANICAL DESIGN /
PROGETTO IMP. MECCANICI ED ELETTRICI
Ing. Sacha Busetti
DBA S.p.A.
Via Natale Battaglia 10, Milano (MI)

ELECTRICAL DESIGN /
PROGETTO IMP. ELETTRICI E SPECIALI
Ing. Sacha Busetti
DBA S.p.A.
Via Natale Battaglia 10, Milano (MI)

COORDINATION / COORDINAMENTO
PM - *Alessandro Masiero*
BIM Manager - *S. Di Biase*
BIM Coordinator - *R. Sodano*

INTEGRATED DESIGN / PROGETTAZIONE COORDINATA:

DBA

DBA S.p.A.
Sede legale:
Piazza Roma, 19
32043 S. Stefano di Cadore (BL)
tel +39 0435 500 411
certificato **ISO 9001:2015** RINA n. 592315/S Qshe n.IT-10010

Sede secondaria:
Viale Felissent, 20/D
31020 Villorba (TV)
tel +39 0422 919 411
Qshe n.IT-10010

PROJECT CODE	ORIGINATOR	FUNCTIONAL	SPACIAL B.	FORM	DISCIPLINE	TYPE	NUMBER
MIL07	DBA	A2	R1	DR	E	61	202

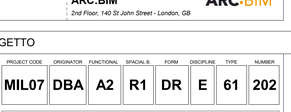

NOTES / NOTE:

DBA PROJECT CODE	PROJECT STAGE	STATUS / STATO	REVISION / REVISIONE	DATE / DATA
13038001	WS3	S4	P01	07/11/25

REV.	REVISION DESCRIPTION / DESCRIZIONE REVISIONE	REVISION DATE
P01	S4 - Riba 3 Submittal	07/11/25

Client / Committente: STACK INFRASTRUCTURE

Oggetto:
Elettrico
Distribuzione - Bassa Tensione
Copertura (R1) Fase 2
Subject:
Electrical
Containments - Low Voltage
Roof (R1) Phase 2

SIZE / FORMATO: A0 [841*1189]
SCALE / SCALA: As indicated
DRAWN / DISEGNATO: F.Shahaj
CHECKED / CONTROLLATO: S. Soncini
APPROVED / APPROVATO: S. Busetti

FILE NAME / NOME FILE: MIL07-DBA-A2-R1-DR-E-61202.P01

MIL07-DBA-A2-R1-DR-E-61202.P01
Revision: P01
Date: 07/11/2025

DBA S.p.A. Tutti gli elaborati compresi nella cartella di consegna DBA S.p.A. Il disegno è di proprietà di DBA S.p.A. The Drawing is the property of DBA S.p.A. All rights are reserved.
Vietata l'utilizzazione non autorizzata anche a terzi e il loro contenuto non può essere comunicato a terzi senza il nostro preventivo consenso scritto. Violations will be prosecuted according to the law.

PROPERTY OF DBA S.p.A. NON UTILIZZABILE O REPLICABILE (ANCHE IN PARTE) SENZA CONSENSO SCRITTO DA PARTE DI DBA.

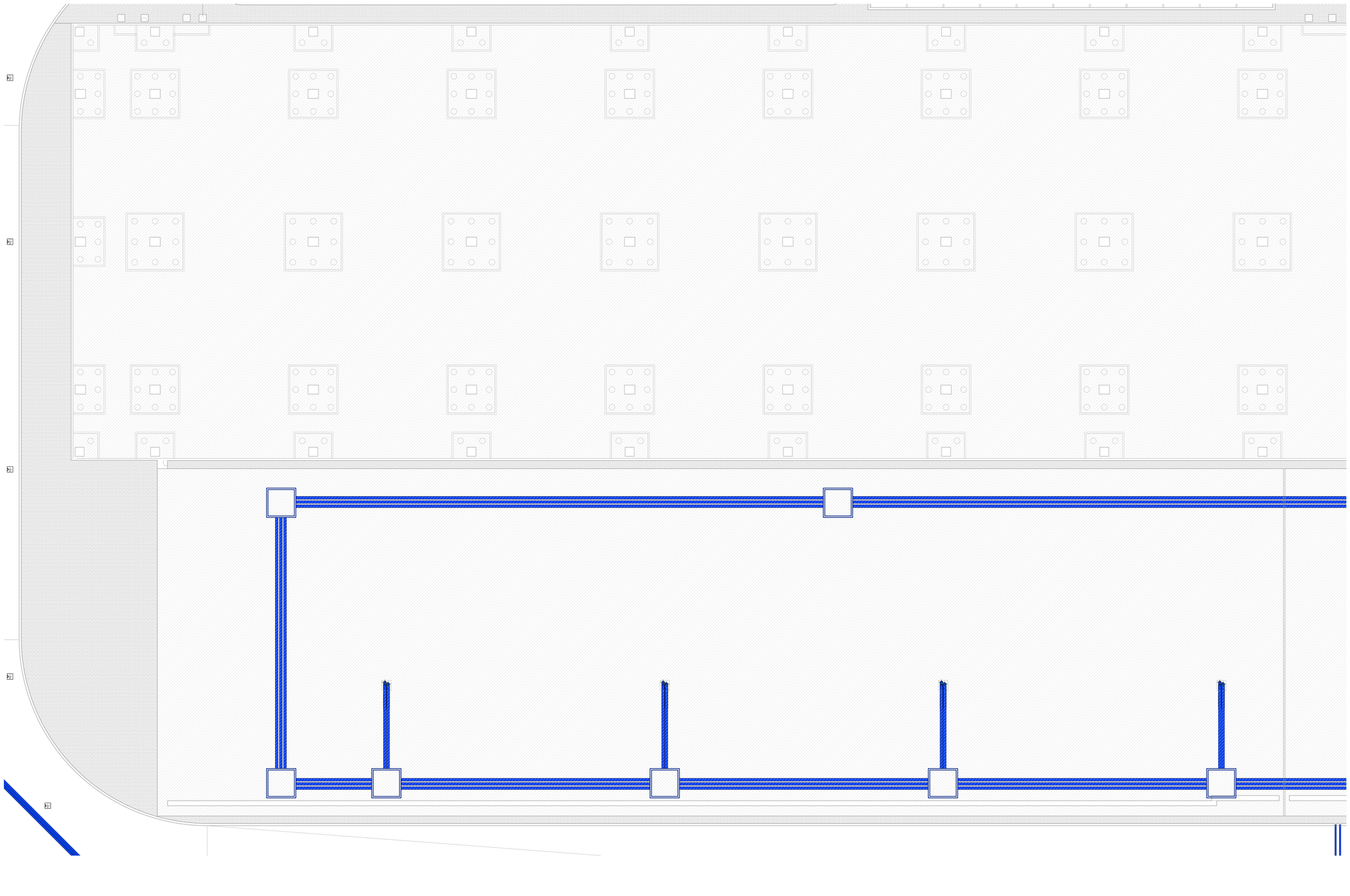

0 2 4 6 8 10m

LEGEND/LEGENDA

MV Containments
Distribuzione Media Tensione

MV Cable Containments
Distribuzione canale MV

Cavidotti Media Tensione diametro 200mm
MV Cable Conduit diameter 200mm

Pozzetto in cemento dim. 2,00m x 2,00m
Concrete manhole dim. 2,00m x 2,00m

Cable trays tag:
Cable tray type: Ladder, Solid bottom, Mesh etc
Service type: MV, LV, Fire, CTRL etc
System: MV, PV, chiller, 1A, 1B etc
Size: dimension WxH [mm]
B.Elev: bottom elevation of the tray in meter

Cable Ladder
Service Type: MV
System: MV
Size: 400x 100[mm]
B.Elev: 3.05[m]

Il presente elaborato è valido solo in coordinamento con tutte le altre discipline specialistiche con le quali deve essere verificata la conformità. Tutte le misure ed eventuali variazioni rispetto al presente elaborato devono essere verificate in cantiere.
This plan only valid in connection & coordination with the plans of all other Specialist disciplines, and must be checked for conformity with these plans. Deviations in dimensions must be clarified with the site management.

CLIENT / COMMITTENTE:

STACK INFRASTRUCTURE

Project Name / Progetto:
STACK MIL07 Datacenter

Location / Indirizzo progetto:
Via Lombardia, 27010 Siziano PV

BIM Client Consultant / Consulente BIM del Cliente
ARC:BIM
2nd Floor, 140 St John Street - London, GB

ARC:BIM

DESIGN TEAM / TEAM DI PROGETTO

CONSULTING DESIGNER / PROGETTISTA

ARCHITECTURAL DESIGN /
PROGETTO ARCHITETTONICO
Arch. Daniele De Bettin
DBA S.p.A.
Viale Liguria 24, Milano (MI)

STRUCTURAL DESIGN /
PROGETTO STRUTTURE
Ing. Diego Serafini
DBA S.p.A.
Viale G. C. Felissent 20D, Villorba (TV)

MECHANICAL DESIGN /
PROGETTO IMP. MECCANICI ED ELETTRICI
Ing. Sacha Busetti
DBA S.p.A.
Via Natale Battaglia 10, Milano (MI)

ELECTRICAL DESIGN /
PROGETTO IMP. ELETTRICI E SPECIALI
Ing. Sacha Busetti
DBA S.p.A.
Via Natale Battaglia 10, Milano (MI)

COORDINATION / COORDINAMENTO
PM - *Alessandro Misiero*
BIM Manager - *S. Di Biase*
BIM Coordinator - *R. Sodano*

INTEGRATED DESIGN / PROGETTAZIONE COORDINATA

DBA

DBA S.p.A.
Sede legale:
Piazza Roma, 19
32043 S. Stefano di Cadore (BL)
tel. +39.0422.893511
certificato **ISO 9001:2015** RINA n.5923/S/S Ophel n.IT-16510

Sede secondaria:
Viale Felissent, 20/D
31020 Villorba (TV)
tel. +39.0422.893511
certificato **ISO 9001:2015** RINA n.5923/S/S Ophel n.IT-16510

PROJECT CODE	ORIGINATOR	FUNCTIONAL	SPACIAL B.	FORM	DISCIPLINE	TYPE	NUMBER
MIL07	DBA	A2	UG	DR	E	59	002

NOTES / NOTE:

DBA PROJECT CODE	PROJECT STAGE	STATUS / STATO	REVISION / REVISIONE	DATE / DATA
13038001	WS3	S4	P01	07/11/25

REV.	REVISION DESCRIPTION / DESCRIZIONE REVISIONE	REVISION DATE
P01	S4 - Riba 3 Submittal	07/11/25

Client / Committente: STACK INFRASTRUCTURE

Oggetto:
Elettrico
Layout Distribuzione Media Tensione Critica
Fondazioni Blocco 2

Subject:
Electrical
MV Containments
Underground Block 2

SIZE / FORMATO: A0 (841*1189)
SCALE / SCALA: 1:100
DRAWN / REDATTO: D. Toffali
CHECKED / CONTROLLATO: S. Soncini
APPROVED / APPROVATO: S. Busetti

FILE NAME / NOME FILE: MIL07-DBA-A2-UG-DR-E-59002.P01

DBA S.p.A. Ad esclusiva proprietà intellettuale spettante alla DBA S.p.A. Vietata la riproduzione o la copia, anche parziale, salvo autorizzazione scritta della DBA S.p.A. The drawing is the exclusive property of DBA S.p.A. and may not reproduced nor shall it be lent to third parties without the prior written consent of DBA S.p.A. No duplication or production of copies in any form or by any means is allowed, in whole or in part, without the prior written consent of DBA S.p.A.

PROPERTY OF DBA S.p.A. NON UTILIZZABILE O REPLICABILE (ANCHE IN PARTE) SENZA CONSENSO SCRITTO DA PARTE DI DBA.

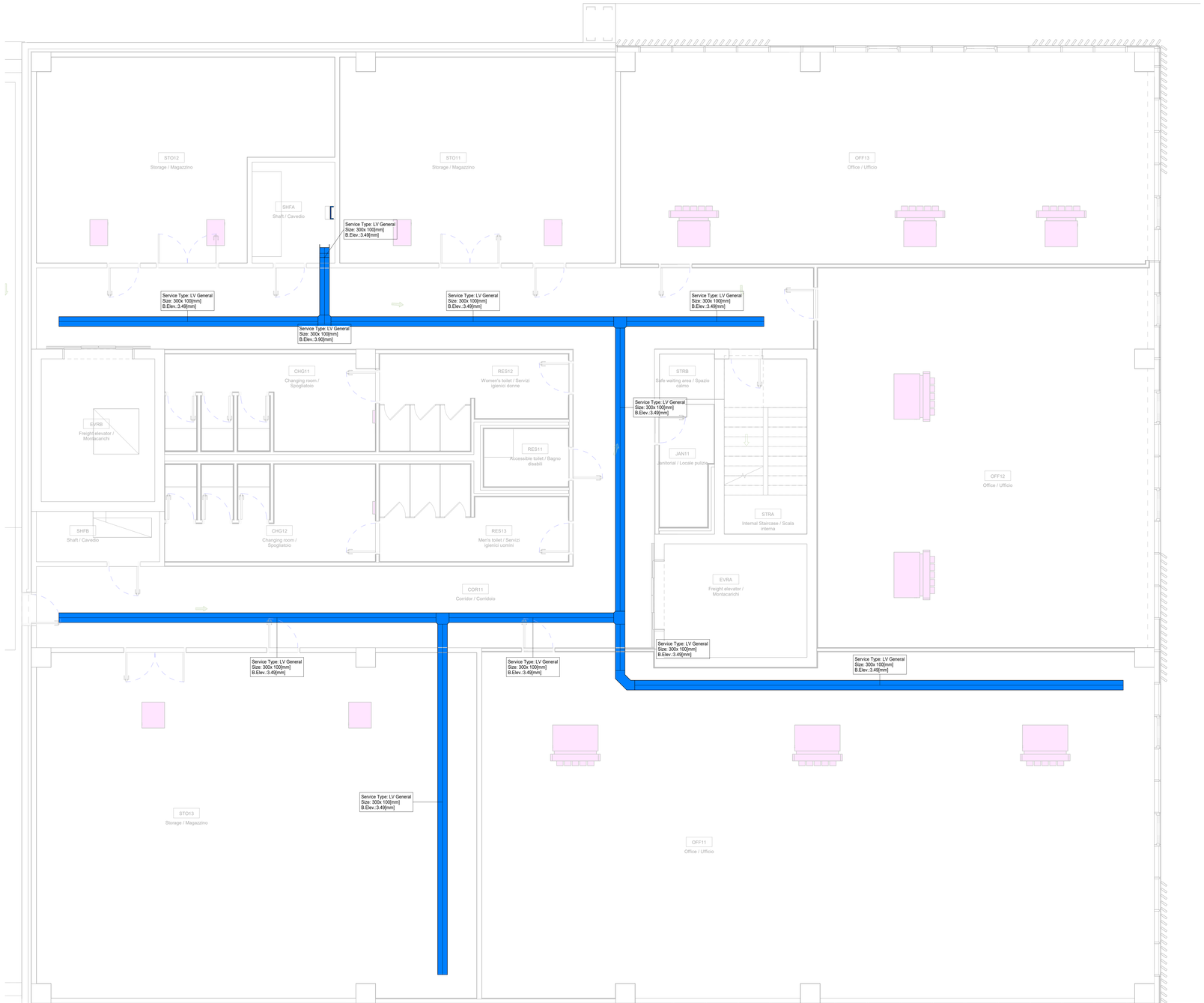

LEGEND/LEGENDA

Distribuzione Bassa Tensione
Low Voltage Containments

Distribuzione Bassa tensione

Containments Low Voltage, Ladder cable tray
Ladder cable try with Sendzimir process, length of the single section m. 3.00, including fastening accessories - thickness 12/10 - Dimensions as indicated in the project

Passerella metallica rettilinea a traversini in acciaio zincato con processo Sendzimir, lunghezza del singolo tratto m. 3,00, compresi accessori di fissaggio - spessore 12/10 - Dimensioni come indicate in progetto -

Distribuzione Bassa tensione

Containments Low Voltage, Ladder cable tray

Solid bottom with Sendzimir process, single element length 3 m, blind or perforated bottom complete with cover for perforated or blind bottom channels, including fixing accessories - thickness 8/10 -

Canale in acciaio zincato con processo Sendzimir, lunghezza del singolo elemento 3 m, a fondo cieco o forato completa di coperchio per canali a fondo forato o cieco, compresi accessori di fissaggio - spessore 8/10

LV Conduit outside diameter Ø 110 mm / Cavidotti Bassa Tensione diametro esterno Ø 110 mm

Electrical LV Pit 2.00x2.00x1.50 m
Pozzetto d'ispezione Bassa Tensione dimensioni 2.00 x 2.00 x 1.50 m

Mechanical Equipment / Attrezzature Meccanica

Il presente elaborato è valido solo in coordinamento con tutte le altre discipline specialistiche con le quali deve essere verificata la conformità. Tutte le misure ed eventuali variazioni rispetto al presente elaborato devono essere verificate in cantiere.
This plan only valid in connection & coordination with the plans of all other Specialist disciplines, and must be checked for conformity with these plans. Deviations in dimensions must be clarified with the site management.

CLIENT / COMMITTENTE:

STACK INFRASTRUCTURE

Project Name / Progetto
STACK MIL07 Datacenter

Location / Indirizzo progetto
Via Lombardia, 27010 Siziano PV

BIM Client Consultant / Consulente BIM del Cliente
ARC:BIM
2nd Floor, 140 St John Street - London, GB

ARC:BIM

DESIGN TEAM / TEAM DI PROGETTO

CONSULTING DESIGNER / PROGETTISTA

ARCHITECTURAL DESIGN /
PROGETTO ARCHITETTONICO
Arch. Daniele De Bettin
DBA S.p.A.
Viale Liguria 24, Milano (MI)

STRUCTURAL DESIGN /
PROGETTO STRUTTURE
Ing. Diego Serafini
DBA S.p.A.
Viale G. G. Felissent 20D, Villorba (TV)

MECHANICAL DESIGN /
PROGETTO IMP. MECCANICI ED ELETTRICI
Ing. Sacha Busetti
DBA S.p.A.
Via Natale Battaglia 10, Milano (MI)

ELECTRICAL DESIGN /
PROGETTO IMP. ELETTRICI E SPECIALI
Ing. Sacha Busetti
DBA S.p.A.
Via Natale Battaglia 10, Milano (MI)

COORDINATION / COORDINAMENTO
PM - *Alessandro Masiero*
BIM Manager - *S. Di Biase*
BIM Coordinator - *R. Sodano*

INTEGRATED DESIGN / PROGETTAZIONE COORDINATA:

DBA

DBA S.p.A.
Sede legale:
Piazza Roma, 19
32044 Pieve di Cadore (BL)
tel. +39.0422.650511
certificata ISO 9001:2015 RINA n.5923/01/S IQNet n.IT-19510

Sede secondaria:
Viale Felissent, 20/D
31020 San Vendemiano (TV)
tel. +39.0422.650511

PROJECT CODE	ORIGINATOR	FUNCTIONAL	SPACIAL B.	FORM	DISCIPLINE	TYPE	NUMBER
MIL07	DBA	AF	00	DR	E	61	111

NOTES / NOTE:

DBA PROJECT CODE	PROJECT STAGE	STATUS / STATO	REVISION / REVISIONE	DATE / DATA
13038001	WS3	S4	P01	07/11/25

REV.	REVISION DESCRIPTION / DESCRIZIONE REVISIONE	REVISION DATE
P01	S4 - Riba 3 Submittal	07/11/25

Client / Committente: STACK INFRASTRUCTURE

Oggetto:
Elettrico
Distribuzione - Bassa Tensione
Piano Terra (0G) Fase 1
Subject:
Electrical
Containments - Low Voltage
Ground Floor (0G) Phase 1

SIZE / FORMATO: A0 (841*1189)
SCALE / SCALA: 1 : 50
DRAWN / REDATTO: F.Shahaj
CHECKED / CONTROLLATO: S. Soncini
APPROVED / APPROVATO: S. Busetti

FILE NAME / NOME FILE: MIL07-DBA-AF-00-DR-E-61111.P01

DBA S.p.A. All intellectual property rights arising upon the copyright relative to the drawing and work n.13038 S.p.A. The drawing is the property of DBA S.p.A. and may not without the prior written consent of DBA S.p.A. be reproduced or disclosed to third parties or used for any purpose other than that for which it is supplied.

DBA S.p.A. Il disegno è di proprietà DBA S.p.A. Il disegno o il progetto è DBA S.p.A. The drawing or the project is DBA S.p.A. and cannot be reproduced or disclosed to third parties or used for any purpose other than that for which it is supplied.

PROPERTY OF DBA S.p.A. NON UTILIZZABILE O RIPLICABILE (ANCHE IN PARTE) SENZA CONSENSO SCRITTO DA PARTE DI DBA.

Plot Date: 2025-11-07 23:49:15.000000
Plot By: DBA Sodano Rodrigo

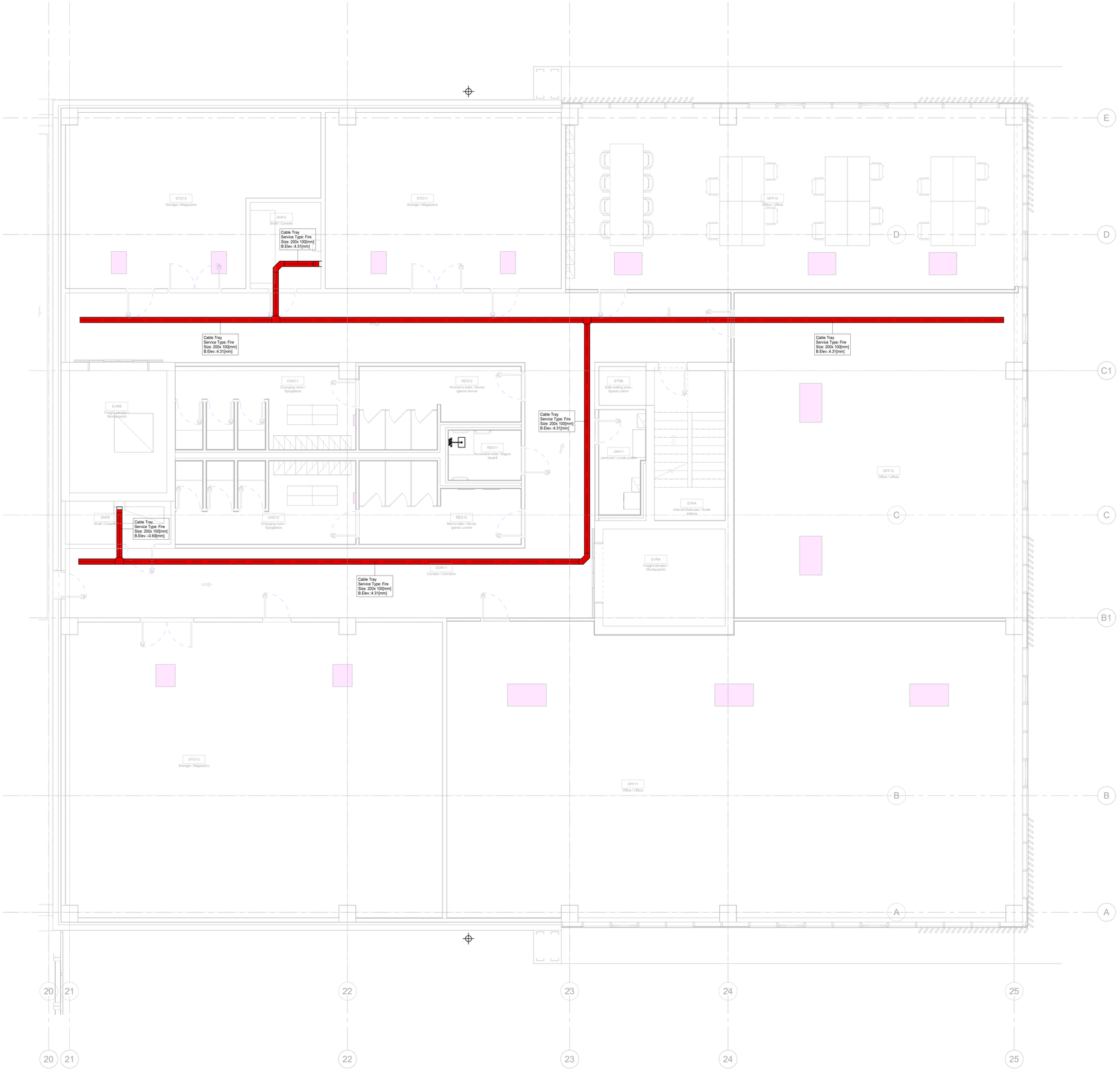

LEGEND/LEGENDA

Extra Low Voltage Containments

	Containments Extra Low Voltage, Ladder cable tray Ladder cable try with Sendzimir process, length of the single section m. 3.00, including fastening accessories - thickness 12/10 - Dimensions as indicated in the project Passerella metallica rettilinea a traversini in acciaio zincato con processo Sendzimir, lunghezza del singolo tratto m. 3,00, compresi accessori di fissaggio - spessore 12/10 - Dimensioni come indicate in progetto -
	Containments Extra Low Voltage, Ladder cable tray Solid bottom with Sendzimir process, single element length 3 m, blind or perforated bottom complete with cover for perforated or blind bottom channels, including fixing accessories - thickness 8/10 - Canale in acciaio zincato con processo Sendzimir, lunghezza del singolo elemento 3 m, a fondo cieco o forato completa di coperchio per canali a fondo forato o cieco, compresi accessori di fissaggio - spessore 8/10 -
	Fire Alarm Distribution
	Controls - BMS - Security distribution
	Mechanical Equipment - Attrezzature Meccanica

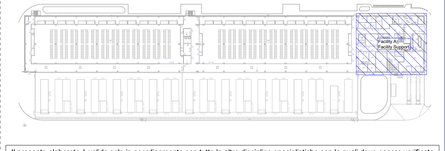

Il presente elaborato è valido solo in coordinamento con tutte le altre discipline specialistiche con le quali deve essere verificata la conformità. Tutte le misure ed eventuali variazioni rispetto al presente elaborato devono essere verificate in cantiere.
This plan only valid in connection & coordination with the plans of all other Specialist disciplines, and must be checked for conformity with these plans. Deviations in dimensions must be clarified with the site management.

CLIENT / COMMITTENTE:

STACK INFRASTRUCTURE

Project Name / Progetto:
STACK MIL07 Datacenter

Location / Indirizzo progetto:
Via Lombardia, 27010 Siziano PV

BIM Client Consultant / Consulente BIM del Cliente
ARC:BIM
2nd Floor, 140 St John Street - London, GB

ARC:BIM

DESIGN TEAM / TEAM DI PROGETTO

CONSULTING DESIGNER / PROGETTISTA

ARCHITECTURAL DESIGN /
PROGETTO ARCHITETTONICO
Arch. Daniele De Bettin
DBA S.p.A.
Viale Liguria 24, Milano (MI)

STRUCTURAL DESIGN /
PROGETTO STRUTTURE
Ing. Diego Serafini
DBA S.p.A.
Viale G. G. Felissent 20D, Villorba (TV)

MECHANICAL DESIGN /
PROGETTO IMP. MECCANICI ED ELETTRICI
Ing. Sacha Busetti
DBA S.p.A.
Via Natale Battaglia 10, Milano (MI)

ELECTRICAL DESIGN /
PROGETTO IMP. ELETTRICI E SPECIALI
Ing. Sacha Busetti
DBA S.p.A.
Via Natale Battaglia 10, Milano (MI)

COORDINATION / COORDINAMENTO
PM - *Alessandro Masiero*
BIM Manager - *S. Di Biase*
BIM Coordinator - *R. Sodano*

INTEGRATED DESIGN / PROGETTAZIONE COORDINATA:

DBA

DBA S.p.A.
Sede legale: Piazza Roma, 19 32043 S. Stefano di Cadore (BL)
Sede operativa: Viale Felissent, 20D 31020 Villorba (TV)
certificato **ISO 9001:2015** RINA n. 592315/S Q/Italy n.IT-10010
Sede secondaria: Viale Liguria 24 20143 Milano (MI)

PROJECT CODE	ORIGINATOR	FUNCTIONAL	SPACIAL BL	FORM	DISCIPLINE	TYPE	NUMBER
MIL07	DBA	AF	00	DR	E	64	111

NOTES / NOTE:

DBA PROJECT CODE	PROJECT STAGE	STATUS / STATO	REVISION / REVISIONE	DATE / DATA
13038001	WS3	S4	P01	07/11/25

REV.	REVISION DESCRIPTION / DESCRIZIONE REVISIONE	REVISION DATE
P01	S4 - Rilsa 3 Submittal	07/11/25

Client / Committente: STACK INFRASTRUCTURE

Oggetto:
Elettrico
Distribuzione - Extra Bassa Tensione
Piano Terra (0G) Fase 1

Subject:
Electrical
Containments - Extra Low Voltage
Ground Floor (0G) Phase 1

SIZE / FORMATO: A0 [841*1189]
SCALE / SCALA: 1 : 50
DRAWN / REDATTO:
CHECKED / CONTROLLATO: S. Soncini
APPROVED / APPROVATO: S. Busetti

FILE NAME / NOME FILE: MIL07-DBA-AF-00-DR-E-64111.P01

MIL07-DBA-AF-00-DR-E-64111.P01

DBA S.p.A. Tutti gli elaborati presenti costituiscono opera dell'ingegno e sono proprietà di DBA S.p.A. Il disegno è di proprietà di DBA S.p.A. per cui essa sola ne può vietare la riproduzione e l'uso. Il disegno non può essere ceduto a terzi, riprodotto o comunque portato a conoscenza di terzi senza il nostro esplicito consenso.
DBA S.p.A. The drawing is the property of DBA S.p.A. and may not be reproduced or disclosed to third parties without our express consent.

PROPERTY OF DBA S.p.A. NON UTILIZZABILE O REPLICABILE (ANCHE IN PARTE) SENZA CONSENSO SCRITTO DA PARTE DI DBA.

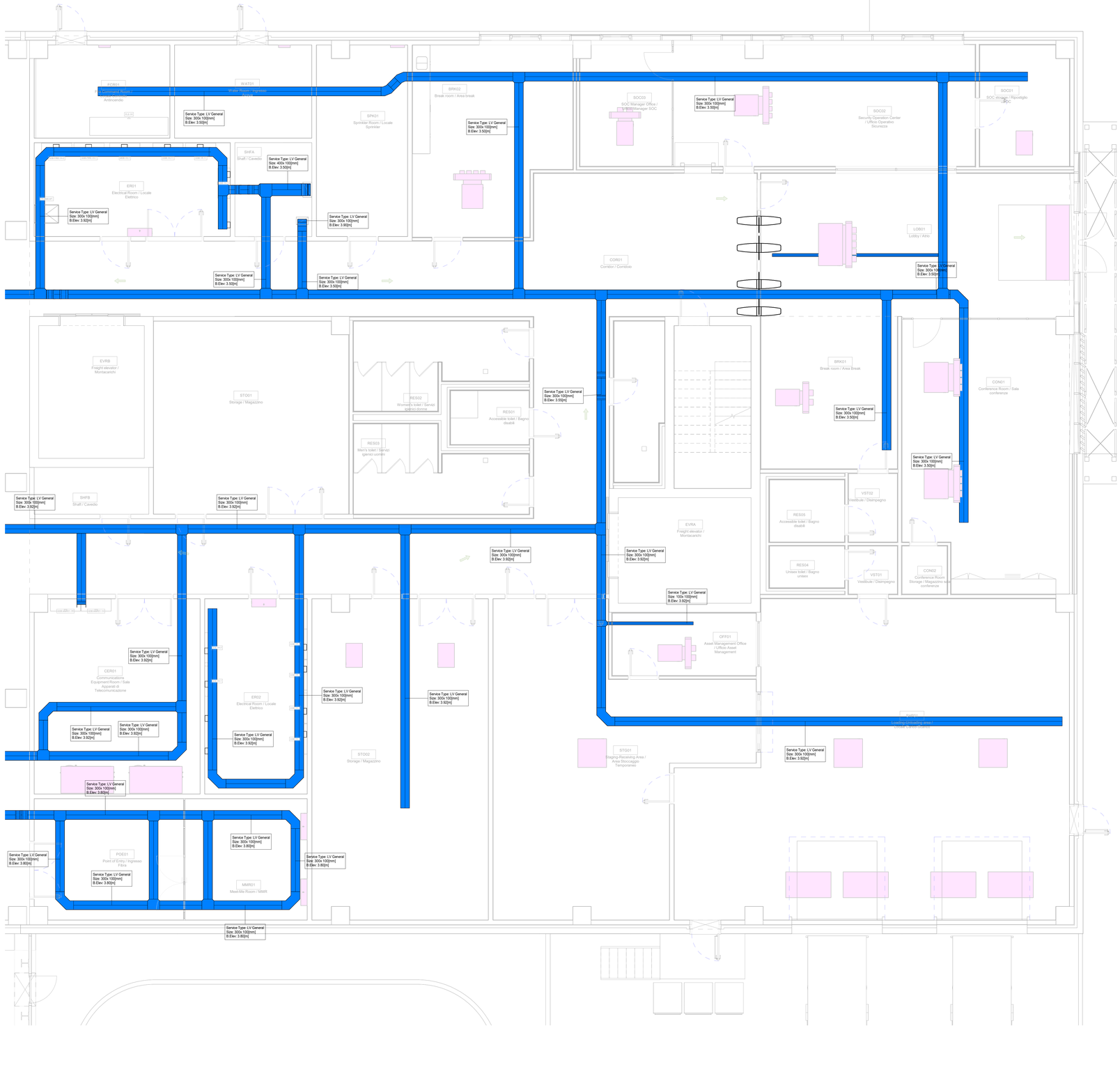

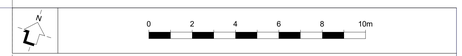

LEGEND/LEGENDA

Distribuzione Bassa Tensione
Low Voltage Containments

Distribuzione Bassa tensione

Containments Low Voltage, Ladder cable tray
Ladder cable try with Sendzimir process, length of the single section m. 3.00, including fastening accessories - thickness 12/10 - Dimensions as indicated in the project

Passerella metallica rettilinea a traversini in acciaio zincato con processo Sendzimir, lunghezza del singolo tratto m. 3,00, compresi accessori di fissaggio - spessore 12/10 - Dimensioni come indicate in progetto -

Distribuzione Bassa tensione

Containments Low Voltage, Ladder cable tray

Solid bottom with Sendzimir process, single element length 3 m, blind or perforated bottom complete with cover for perforated or blind bottom channels, including fixing accessories - thickness 8/10 -

Canale in acciaio zincato con processo Sendzimir, lunghezza del singolo elemento 3 m, a fondo cieco o forato completa di coperchio per canali a fondo forato o cieco, compresi accessori di fissaggio - spessore 8/10

LV Conduit outside diameter Ø 110 mm / Cavidotti Bassa Tensione diametro esterno Ø 110 mm

Electrical LV Pit 2.00x2.00x1.50 m
Pozzetto d'ispezione Bassa Tensione dimensioni 2.00 x 2.00 x 1.50 m

Mechanical Equipment / Attrezzature Meccanica

Il presente elaborato è valido solo in coordinamento con tutte le altre discipline specialistiche con le quali deve essere verificata la conformità. Tutte le misure ed eventuali variazioni rispetto al presente elaborato devono essere verificate in cantiere.
This plan only valid in connection & coordination with the plans of all other Specialist disciplines, and must be checked for conformity with these plans. Deviations in dimensions must be clarified with the site management.

CLIENT / COMMITTENTE:

STACK INFRASTRUCTURE

Project Name / Progetto:
STACK MIL07 Datacenter

Location / Indirizzo progetto:
Via Lombardia, 27010 Siziano PV

BIM Client Consultant / Consulente BIM del Cliente
ARC:BIM
2nd Floor, 140 St John Street - London, GB

DESIGN TEAM / TEAM DI PROGETTO

CONSULTING DESIGNER / PROGETTISTA

ARCHITECTURAL DESIGN /
PROGETTO ARCHITETTONICO
Arch. Daniele De Bettin
DBA S.p.A.
Viale Liguria 24, Milano (MI)

STRUCTURAL DESIGN /
PROGETTO STRUTTURE
Ing. Diego Serafini
DBA S.p.A.
Viale G. G. Felissent 20D, Villorba (TV)

MECHANICAL DESIGN /
PROGETTO IMP. MECCANICI ED ELETTRICI
Ing. Sacha Busetti
DBA S.p.A.
Via Natale Battaglia 10, Milano (MI)

ELECTRICAL DESIGN /
PROGETTO IMP. ELETTRICI E SPECIALI
Ing. Sacha Busetti
DBA S.p.A.
Via Natale Battaglia 10, Milano (MI)

COORDINATION / COORDINAMENTO
PM - Alessandro Masiero
BIM Manager - S. Di Biase
BIM Coordinator -R. Sodano

INTEGRATED DESIGN / PROGETTAZIONE COORDINATA:

DBA

DBA S.p.A.
Sede legale:
Via Po 11 Roma, 19
32045 S. Stefano di Cadore (BL)
tel. +39 0422 693511
certificata **ISO 9001:2015** RINA n.5923/S/S Q/Mail n.IT-10516

Sede secondaria:
Viale Felissent, 20/D
31020 Villorba (TV)
tel. +39 0422 693511

PROJECT CODE	ORIGINATOR	FUNCTIONAL	SPACIAL B.	FORM	DISCIPLINE	TYPE	NUMBER
MIL07	DBA	AF	01	DR	E	61	211

NOTES / NOTE:

DBA PROJECT CODE	PROJECT STAGE	STATUS / STATO	REVISION / REVISIONE	DATE / DATA
13038001	WS3	S4	P01	07/11/25

REV.	REVISION DESCRIPTION / DESCRIZIONE REVISIONE	REVISION DATE
P01	S4 - Riba 3 Submittal	07/11/25

Client / Committente
STACK INFRASTRUCTURE

Oggetto:
Elettrico
Distribuzione - Bassa Tensione
Piano Primo Fase 1
Subject:
Electrical
Containments - Low Voltage
First Floor Phase 1

SIZE / FORMATO: A0 [841*1189]
SCALE / SCALA: 1 : 50
DRAWN / REDATTO: F.Shahaj
CHECKED / CONTROLLATO: S. Soncini
APPROVED / APPROVATO: S. Busetti

FILE NAME / NOME FILE: MIL07-DBA-AF-01-DR-E-61211.P01

DBA S.p.A. hereby retains all ownership rights and other intellectual property rights in and to this drawing and shall be entitled to the protection thereof under the Italian Copyright Law and other laws of the Italian Republic and other applicable jurisdictions. This drawing may not be used, reproduced or disclosed to any third party without the prior written consent of DBA S.p.A.
DBA S.p.A. ha ricevuto in esclusiva proprietà intellectuale e di proprietà di DBA S.p.A. il disegno e di proprietà di DBA S.p.A. ed è tutelato dalla legge sul diritto d'autore e altre leggi della Repubblica Italiana e altre giurisdizioni applicabili. Il disegno non può essere usato, riprodotto o divulgato a terzi senza il previo consenso scritto di DBA S.p.A.

0 2 4 6 8 10m

LEGEND/LEGENDA

Extra Low Voltage Containments

Containments Extra Low Voltage, Ladder cable tray
Ladder cable try with Sendzimir process, length of the single section m. 3.00, including fastening accessories - thickness 12/10 - Dimensions as indicated in the project

Passerella metallica rettilinea a traversini in acciaio zincato con processo Sendzimir, lunghezza del singolo tratto m. 3,00, compresi accessori di fissaggio - spessore 12/10 - Dimensioni come indicate in progetto -

Containments Extra Low Voltage, Ladder cable tray

Solid bottom with Sendzimir process, single element length 3 m, blind or perforated bottom complete with cover for perforated or blind bottom channels, including fixing accessories - thickness 8/10 -

Canale in acciaio zincato con processo Sendzimir, lunghezza del singolo elemento 3 m, a fondo cieco o forato completa di coperchio per canali a fondo forato o cieco, compresi accessori di fissaggio - spessore 8/10 -

Fire Alarm Distribution

Controls - BMS - Security distribution

Mechanical Equipment - Attrezzature Meccanica

Il presente elaborato è valido solo in coordinamento con tutte le altre discipline specialistiche con le quali deve essere verificata la conformità. Tutte le misure ed eventuali variazioni rispetto al presente elaborato devono essere verificate in cantiere.
This plan only valid in connection & coordination with the plans of all other Specialist disciplines, and must be checked for conformity with these plans. Deviations in dimensions must be clarified with the site management.

CLIENT / COMMITTENTE:

STACK INFRASTRUCTURE

Project Name / Progetto:
STACK MIL07 Datacenter

Location / Indirizzo progetto:
Via Lombardia, 27010 Siziano PV

BIM Client Consultant / Consulente BIM del Cliente
ARC:BIM
2nd Floor, 140 St John Street - London, GB

ARC:BIM

DESIGN TEAM / TEAM DI PROGETTO

CONSULTING DESIGNER / PROGETTISTA

ARCHITECTURAL DESIGN /
PROGETTO ARCHITETTONICO
Arch. Daniele De Bettin
DBA S.p.A.
Viale Liguria 24, Milano (MI)

STRUCTURAL DESIGN /
PROGETTO STRUTTURE
Ing. Diego Serafini
DBA S.p.A.
Viale G. G. Felissent 20D, Villorba (TV)

MECHANICAL DESIGN /
PROGETTO IMP. MECCANICI ED ELETTRICI
Ing. Sacha Busetti
DBA S.p.A.
Via Natale Battaglia 10, Milano (MI)

ELECTRICAL DESIGN /
PROGETTO IMP. ELETTRICI E SPECIALI
Ing. Sacha Busetti
DBA S.p.A.
Via Natale Battaglia 10, Milano (MI)

COORDINATION / COORDINAMENTO
PM - *Alessandro Masiero*
BIM Manager - *S. Di Biase*
BIM Coordinator - *R. Sodano*

INTEGRATED DESIGN / PROGETTAZIONE COORDINATA

DBA

DBA S.p.A.
Sede legale:
Piazza Roma, 19
31044 Montebelluna (TV) Cadore (BL)
tel. +39.0423.600011
certificata **ISO 9001:2015** RINA n.592/01/S IQNet n.IT-19510
Sede secondaria:
Viale Felissent, 20/C
31020 San Vendemiano (TV)
tel. +39.0422.894551

PROJECT CODE	ORIGINATOR	FUNCTIONAL	SPACIAL B.	FORM	DISCIPLINE	TYPE	NUMBER
MIL07	DBA	AF	01	DR	E	64	211

NOTES / NOTE:

DBA PROJECT CODE	PROJECT STAGE	STATUS / STATO	REVISION / REVISIONE	DATE / DATA
13038001	WS3	S4	P01	07/11/25

REV.	REVISION DESCRIPTION / DESCRIZIONE REVISIONE	REVISION DATE
P01	S4 - Riba 3 Submittal	07/11/25

Client / Committente: STACK INFRASTRUCTURE

Oggetto:
Elettrico
Distribuzione - Extra Bassa Tensione
Piano Primo Fase 1
Subject:
Electrical
Containments - Extra Low Voltage
First Floor Phase 1

PAPER / FORMATO: A0 [841*1189]
SCALE / SCALA: 1 : 50
DRAWN / REDATTO: F.Shahaj
CHECKED / CONTROLLATO: S. Soncini
APPROVED / APPROVATO: S. Busetti

FILE NAME / NOME FILE: MIL07-DBA-AF-01-DR-E-64211.P01

Plot Date/Data: 08/11/2025 12:12:15 (GMT+01:00)
Plot Number: 0000

DBA S.p.A. ha il diritto di proprietà sugli elaborati ed ha il diritto di proprietà intellettuale ed industriale sugli stessi. Il diritto di proprietà intellettuale ed industriale sugli elaborati di DBA S.p.A. ha il carattere di esclusiva. Il diritto di proprietà intellettuale ed industriale sugli elaborati di DBA S.p.A. ha il carattere di esclusiva. The drawing is the exclusive property of DBA S.p.A. and may not extract the prior written consent of DBA S.p.A. The drawing is the exclusive property of DBA S.p.A. and may not extract the prior written consent of DBA S.p.A.

PROPERTY OF DBA S.p.A. NON UTILIZZABILE O REPLICABILE (ANCHE IN PARTE) SENZA CONSENSO SCRITTO DA PARTE DI DBA.

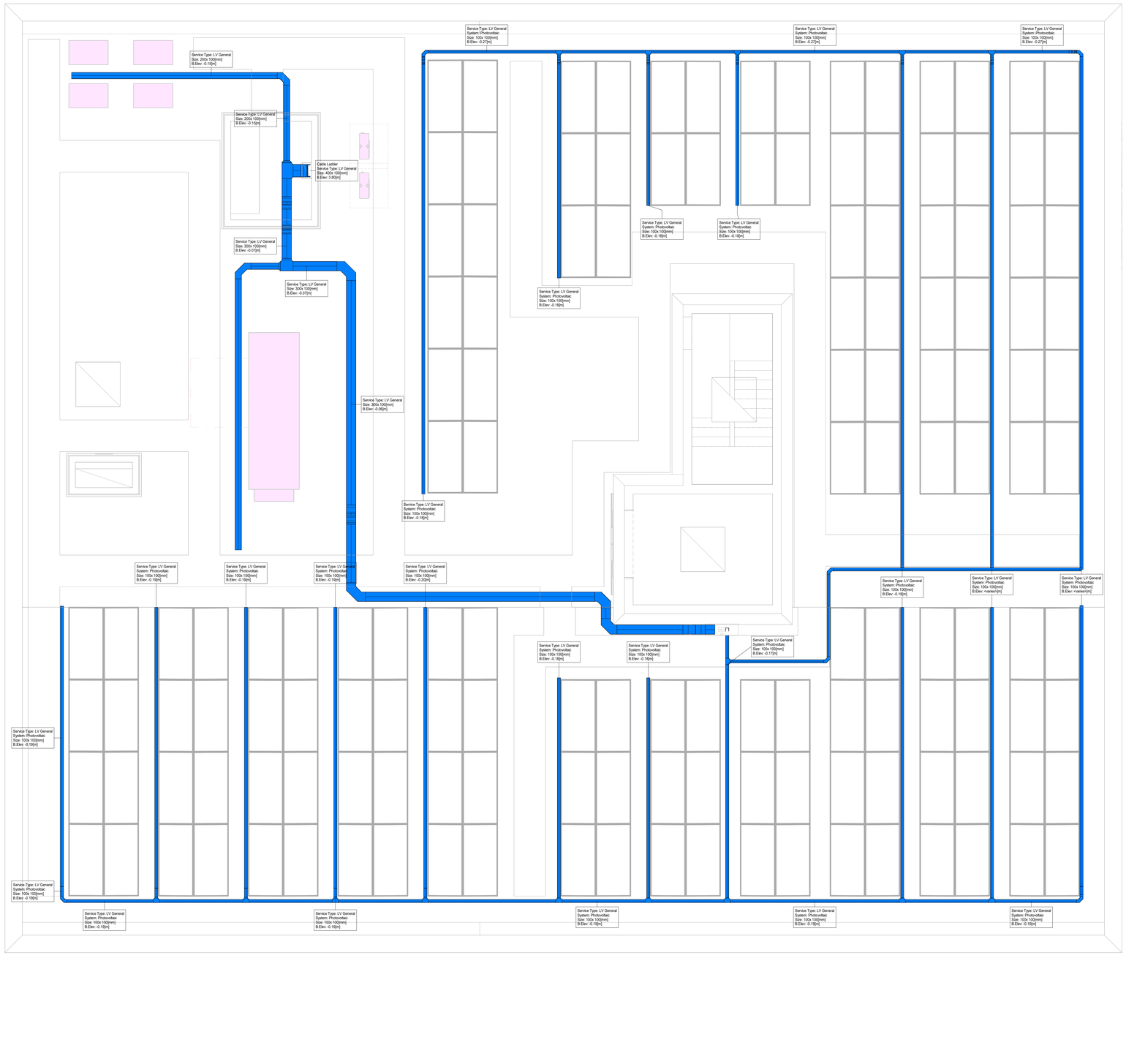

LEGEND/LEGENDA

Distribuzione Bassa Tensione
Low Voltage Containments

Distribuzione Bassa tensione

Containments Low Voltage, Ladder cable tray
Ladder cable try with Sendzimir process, length of the single section m. 3.00, including fastening accessories - thickness 12/10 - Dimensions as indicated in the project

Passerella metallica rettilinea a traversini in acciaio zincato con processo Sendzimir, lunghezza del singolo tratto m. 3,00, compresi accessori di fissaggio - spessore 12/10 - Dimensioni come indicate in progetto -

Distribuzione Bassa tensione

Containments Low Voltage, Ladder cable tray

Solid bottom with Sendzimir process, single element length 3 m, blind or perforated bottom complete with cover for perforated or blind bottom channels, including fixing accessories - thickness 8/10 -

Canale in acciaio zincato con processo Sendzimir, lunghezza del singolo elemento 3 m, a fondo cieco o forato completa di coperchio per canali a fondo forato o cieco, compresi accessori di fissaggio - spessore 8/10

LV Conduit outside diameter Ø 110 mm / Cavidotti Bassa Tensione diametro esterno Ø 110 mm

Electrical LV Pit 2.00x2.00x1.50 m
Pozzetto d'ispezione Bassa Tensione dimensioni 2.00 x 2.00 x 1.50 m

Mechanical Equipment / Attrezzature Meccanica

Il presente elaborato è valido solo in coordinamento con tutte le altre discipline specialistiche con le quali deve essere verificata la conformità. Tutte le misure ed eventuali variazioni rispetto al presente elaborato devono essere verificate in cantiere.
This plan only valid in connection & coordination with the plans of all other Specialist disciplines, and must be checked for conformity with these plans. Deviations in dimensions must be clarified with the site management.

CLIENT / COMMITTENTE:

STACK INFRASTRUCTURE

Project Name / Progetto:
STACK MIL07 Datacenter

Location / Indirizzo progetto:
Via Lombardia, 27010 Siziano PV

BIM Client Consultant / Consulente BIM del Cliente
ARC:BIM
2nd Floor, 140 St John Street - London, GB

ARC:BIM

DESIGN TEAM / TEAM DI PROGETTO

CONSULTING DESIGNER / PROGETTISTA

ARCHITECTURAL DESIGN /
PROGETTO ARCHITETTONICO
Arch. Daniele De Bettin
DBA S.p.A.
Viale Liguria 24, Milano (MI)

STRUCTURAL DESIGN /
PROGETTO STRUTTURE
Ing. Diego Serafini
DBA S.p.A.
Viale G. C. Felissent 20D, Villorba (TV)

MECHANICAL DESIGN /
PROGETTO IMP. MECCANICI ED ELETTRICI
Ing. Sacha Busetti
DBA S.p.A.
Via Natale Battaglia 10, Milano (MI)

ELECTRICAL DESIGN /
PROGETTO IMP. ELETTRICI E SPECIALI
Ing. Sacha Busetti
DBA S.p.A.
Via Natale Battaglia 10, Milano (MI)

COORDINATION / COORDINAMENTO
PM - *Alessandro Misiano*
BIM Manager - *S. Di Biase*
BIM Coordinator - *R. Sodano*

INTEGRATED DESIGN / PROGETTAZIONE COORDINATA

DBA

DBA S.p.A.
Sede legale:
Piazza Roma, 19
32043 S. Stefano di Cadore (BL)
tel. +39.0422.850511
certificato **ISO 9001:2015** RINA n.5923/S/S Cgheit n.IT-165110

Sede secondaria:
Viale Felissent, 20/C
31020 Villorba (TV)
tel. +39.0422.891011
certificato **ISO 9001:2015** RINA n.5923/S/S Cgheit n.IT-165110

PROJECT CODE	ORIGINATOR	FUNCTIONAL	SPACIAL B.	FORM	DISCIPLINE	TYPE	NUMBER
MIL07	DBA	AF	R2	DR	E	61	311

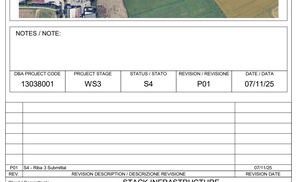

NOTES / NOTE:

DBA PROJECT CODE	PROJECT STAGE	STATUS / STATO	REVISION / REVISIONE	DATE / DATA
13038001	WS3	S4	P01	07/11/25

REV.	REVISION DESCRIPTION / DESCRIZIONE REVISIONE	REVISION DATE
P01	S4 - Riba 3 Submittal	07/11/25

Client / Committente: STACK INFRASTRUCTURE

Oggetto:
Elettrico
Distribuzione - Bassa Tensione
Copertura (RF) Uffici

Subject:
Electrical
Containments - Low Voltage
Roof (RF) Offices

SIZE / FORMATO: A0 [841*1189]
SCALE / SCALA: 1 : 50
DRAWN / REDATTO: F.Shahaj
CHECKED / CONTROLLATO: S. Soncini
APPROVED / APPROVATO: S. Busetti

FILE NAME / NOME FILE: MIL07-DBA-AF-R2-DR-E-61311.P01

DBA S.p.A. Ad entità di proprietà della società DBA S.p.A. è dovuto il compenso ONORARIO ai sensi della vigente legge sulla proprietà intellettuale. The drawing is the property of DBA S.p.A. and may not be reproduced nor given to third parties without prior written consent. Il disegno è di proprietà della DBA S.p.A. e non può essere riprodotto o portato a conoscenza di terzi senza il nostro consenso scritto.

PROPERTY OF DBA S.p.A. NON UTILIZZABILE O REPLICABILE (ANCHE IN PARTE) SENZA CONSENSO SCRITTO DA PARTE DI DBA.

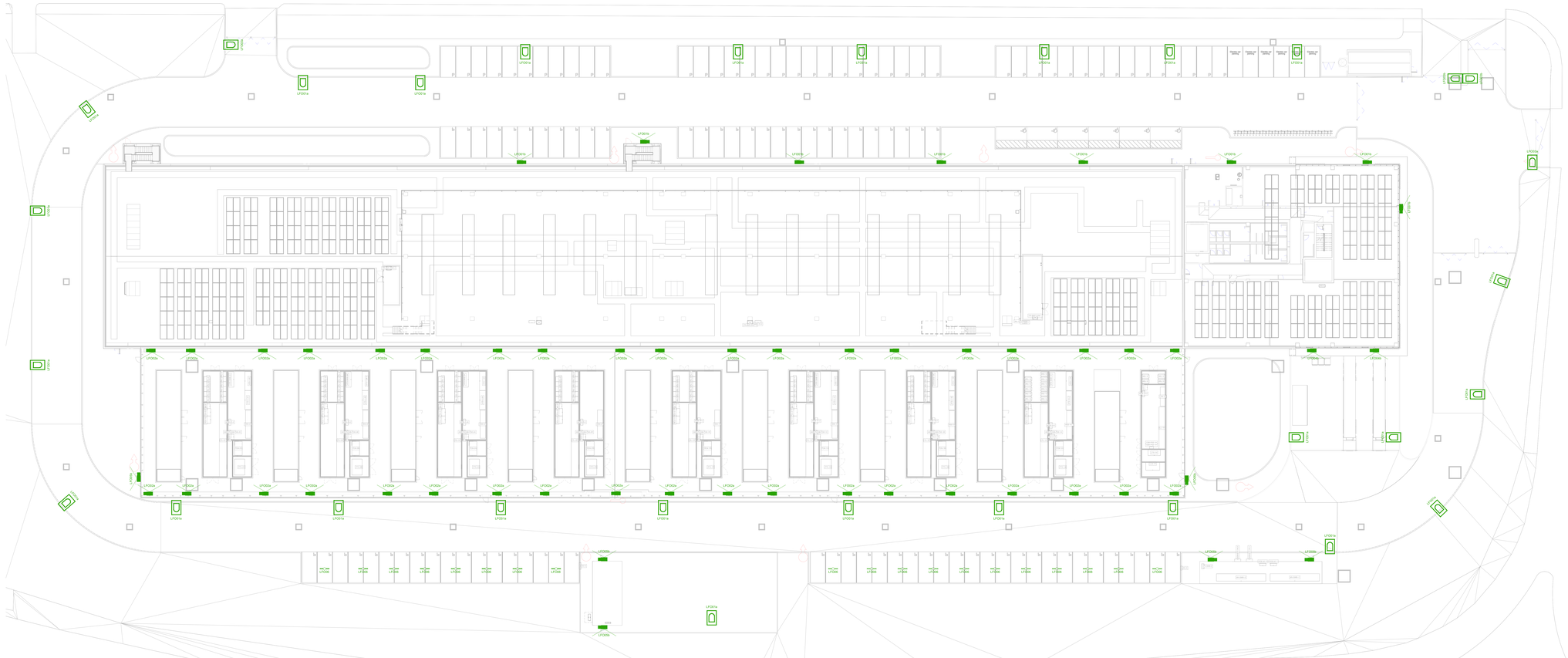

0 2 4 6 8 10m

LEGEND/LEGENDA

Lighting Fixture

LFO01a	LED luminaire - 62 W - Light source 9100m, 4000K, impact resistance IK08, luminous efficiency 146lm/W - Pole mounting - H installation 8.00m - Corpo illuminante LED - 62 W - IP66 - Sorgente luminosa 9100lm, 4000K, resistenza agli urti IK08, efficienza luminosa 146lm/W - Montaggio su palo - IP66 - H installazione 8.00m
LFO02a	Projector light LED - 34W - Light source 5100m, 4000K, impact resistance IK08, luminous efficiency 150lm/W - Wall mounted - IP66 - Lampada proiettore LED - 34W - Sorgente luminosa 5100lm - 4000K - resistenza agli urti IK08, efficienza luminosa 150lm/W a parete - IP66
LFO05b	Projector light - 16.50W - Light source 2400lm, 4000K, impact resistance IK09, luminous efficiency 145lm/W - Wall mounting - H installation 8.00m - IP66 - Lampada proiettore LED - 16.50W - Sorgente luminosa 2400lm, 4000K, resistenza agli urti IK09, efficienza luminosa 145lm/W - IP66 - Montaggio a Parete- H installazione 8.00m
LFO06	Ceiling light LED - 40W - Light source 5000lm, 4000K, impact resistance IK10, luminous efficiency 125lm/W - IP66 - Lampada fissare a sospensione LED a soffitto - 40W - Sorgente luminosa 5000lm, 4000K, resistenza agli urti IK10, efficienza luminosa 125lm/W - IP66

Note: For more information refer to the lighting calculation report : "MIL07-DBA-XX-XX-CA-E-63001 - Calculation - Lighting"

Il presente elaborato è valido solo in coordinamento con tutte le altre discipline specialistiche con le quali deve essere verificata la conformità. Tutte le misure ed eventuali variazioni rispetto al presente elaborato devono essere verificate in cantiere.
This plan only valid in connection & coordination with the plans of all other Specialist disciplines, and must be checked for conformity with these plans. Deviations in dimensions must be clarified with the site management.

CLIENT / COMMITTENTE:

STACK INFRASTRUCTURE

STACK MIL07 Datacenter

Via Lombardia, 27010 Siziano PV

BIM Manager / Coordinatore / Consulente BIM del Cliente
ARC:BIM
2nd Floor, 140 St John Street - London, GB

ARC:BIM

DESIGN TEAM / TEAM DI PROGETTO

CONSULTING DESIGNER / PROGETTISTA

ARCHITECTURAL DESIGN /
PROGETTO ARCHITETTONICO
Arch. Daniele De Betto
DBA S.p.A.
Viale Liguria 24, Milano (MI)

STRUCTURAL DESIGN /
PROGETTO STRUTTURE
Ing. Diego Serafini
DBA S.p.A.
Viale G. G. Felissent 20D, Vittorio (TV)

MECHANICAL DESIGN /
PROGETTO IMP. MECCANICI ED ELETTRICI
Ing. Sandro Buselli
DBA S.p.A.
Via Natale Battaglia 10, Milano (MI)

ELECTRICAL DESIGN /
PROGETTO IMP. ELETTRICI E SPECIALI
Ing. Sandro Buselli
DBA S.p.A.
Via Natale Battaglia 10, Milano (MI)

COORDINATION / COORDINAMENTO
PM - *Alessandro Masaro*
BIM Manager - *S. Di Biase*
BIM Coordinator - *R. Solano*

INTEGRATED DESIGN / PROGETTAZIONE COORDINATA

DBA

DBA S.p.A.
Sede legale:
Via Natale Battaglia 10
20127 S. Donato di Lambro (BL)
Sede secondaria:
Viale Giuseppe Mazzini 24
31029 Vittorio Veneto (TV)
Capitale sociale € 1.000.000 i.v.
certificata ISO 9001:2015 RINA: n.IQ0220125 Ed.2 Rev.0 11/2019

PROJECT CODE	ORIGINATOR	FUNCTIONAL	SPATIAL B.	FORM	DISCIPLINE	TYPE	NUMBER
MIL07	DBA	EX	RL	DR	E	63	001

NOTES / NOTE:

DBA PROJECT CODE	PROJECT STAGE	STATUS / STATO	REVISION / REVISIONE	DATE / DATA
13038001	WS3	S4	P01	07/11/2025

REV.	IM	TRIM3 Submittal	07/11/2025
REV.		REVISION DESCRIPTION / DESCRIZIONE REVISIONE	REVISION DATE

Client / Committente
STACK INFRASTRUCTURE

Oggetto:

Subject:
Electrical
External Road Level
Lighting

SIZE / FORMATO
A0 +2 (841x1189)

Author / Autore
S. Sonzini

Verified by / Verificato da
S. Buselli

Approved by / Approvato da
S. Buselli

Authorized by / Autorizzato da
S. Buselli

As indicated

FILE NAME / NOME FILE: MIL07-DBA-EX-RL-DR-E-63001.P01

PROPERTY OF DBA S.p.A. - NON LITIGIOSA E DI RIPRODUZIONE VIETATA SENZA CONSENSO SCRITTO DA PARTE DI DBA.

0 2 4 6 8 10m

LEGEND/LEGENDA

Apparecchiature Elettriche
Electrical Equipment

MV-SWB - XX	Electrical Switchboard MV Quadro elettrico MT dim. 8000x1200x2300 mm
GDB - MV - XX	Electrical Switchboard MV Quadro elettrico MT dim. 1000x400x2000 mm
GDB - EXT - 1H - XX	Electrical Switchboard Quadro elettrico dim. 1000x400x2000 mm
PV - SWB - 2	Electrical Switchboard PV Quadro elettrico Fotovoltaico dim. 800x400x2000
INV - XX	Inverter PV Inverter Fotovoltaico dim. 640x270x530 mm
PPV	Photovoltaic panel 580W Pannello Fotovoltaico 580W dim. 2278x1134 mm

Il presente elaborato è valido solo in coordinamento con tutte le altre discipline specialistiche con le quali deve essere verificata la conformità. Tutte le misure ed eventuali variazioni rispetto al presente elaborato devono essere verificate in cantiere.
This plan only valid in connection & coordination with the plans of all other Specialist disciplines, and must be checked for conformity with these plans. Deviations in dimensions must be clarified with the site management.

CLIENT / COMMITTENTE:

STACK INFRASTRUCTURE

STACK MIL07 Datacenter

Via Lombardia, 27010 Siziano PV

BIM Design Consultant / Consulente BIM del Cliente
ARC:BIM
2nd Floor, 140 St John Street - London, GB

ARC:BIM

DESIGN TEAM / TEAM DI PROGETTO

CONSULTING DESIGNER / PROGETTISTA

ARCHITECTURAL DESIGN /
PROGETTO ARCHITETTONICO
Arch. Daniele De Bettin
DBA S.p.A.
Viale Liguria 24, Milano (MI)

STRUCTURAL DESIGN /
PROGETTO STRUTTURE
Ing. Diego Serafini
DBA S.p.A.
Viale G. G. Felissent 20D, Vittorio (TV)

MECHANICAL DESIGN /
PROGETTO IMP. MECCANICI ED ELETTRICI
Ing. S. Buselli
DBA S.p.A.
Via Natale Battaglia 10, Milano (MI)

ELECTRICAL DESIGN /
PROGETTO IMP. ELETTRICI E SPECIALI
Ing. Sarika Buselli
DBA S.p.A.
Via Natale Battaglia 10, Milano (MI)

COORDINATION / COORDINAMENTO
PM - Alessandro Mizzaro
BIM Manager - S. D.Biase
BIM Coordinator - R. Solano

INTEGRATED DESIGN / PROGETTAZIONE COORDINATA

DBA

DBA S.p.A.
Sede legale:
Via Liguria, 24
31015 S. Vendemiano di Cadoins (BL)
Sede secondaria:
Via Natale Battaglia, 10
20127 Milano (MI)
Sede secondaria:
Via G. G. Felissent, 20D
31029 Vittorio Veneto (TV)
certificato ISO 9001:2015 RINA: 4-0023/0155-QSA-0117-0001D

PROJECT CODE	ORIGINATOR	FUNCTIONAL	SPATIAL S.	FORM	DISCIPLINE	TYPE	NUMBER
MIL07	DBA	EX	RL	DR	E	60	001

NOTES / NOTE:

DBA PROJECT CODE	PROJECT STAGE	STATUS / STATO	REVISION / REVISIONE	DATE / DATA
13038001	WS3	S4	P01	07/11/2025

REV.	DESCRIPTION / DESCRIZIONE REVISIONE	REVISION DATE
P01	S4 - RIBAS Submittal	07/11/2025

Client / Committente: STACK INFRASTRUCTURE

Oggetto:

Subject:
Electrical
External Road Level
Main Equipment

SIZE / FORMATO: A0 +2 (841*1189)
SCALE / SCALA: As indicated
DRAWN / DISEGNATO: S. Sonorie
CHECKED / CONTROLLATO: S. Sarkar
APPROVED / APPROVATO: S. Buselli

FILE NAME / NOME FILE: MIL07-DBA-EX-RL-DR-E-6001-P01

PROPERTY OF DBA S.p.A. - NON UTILIZZABILE E RIPRODUBBILE (ANCHE IN PARTE) SENZA CONSENSO SCRITTO DA PARTE DI DBA.

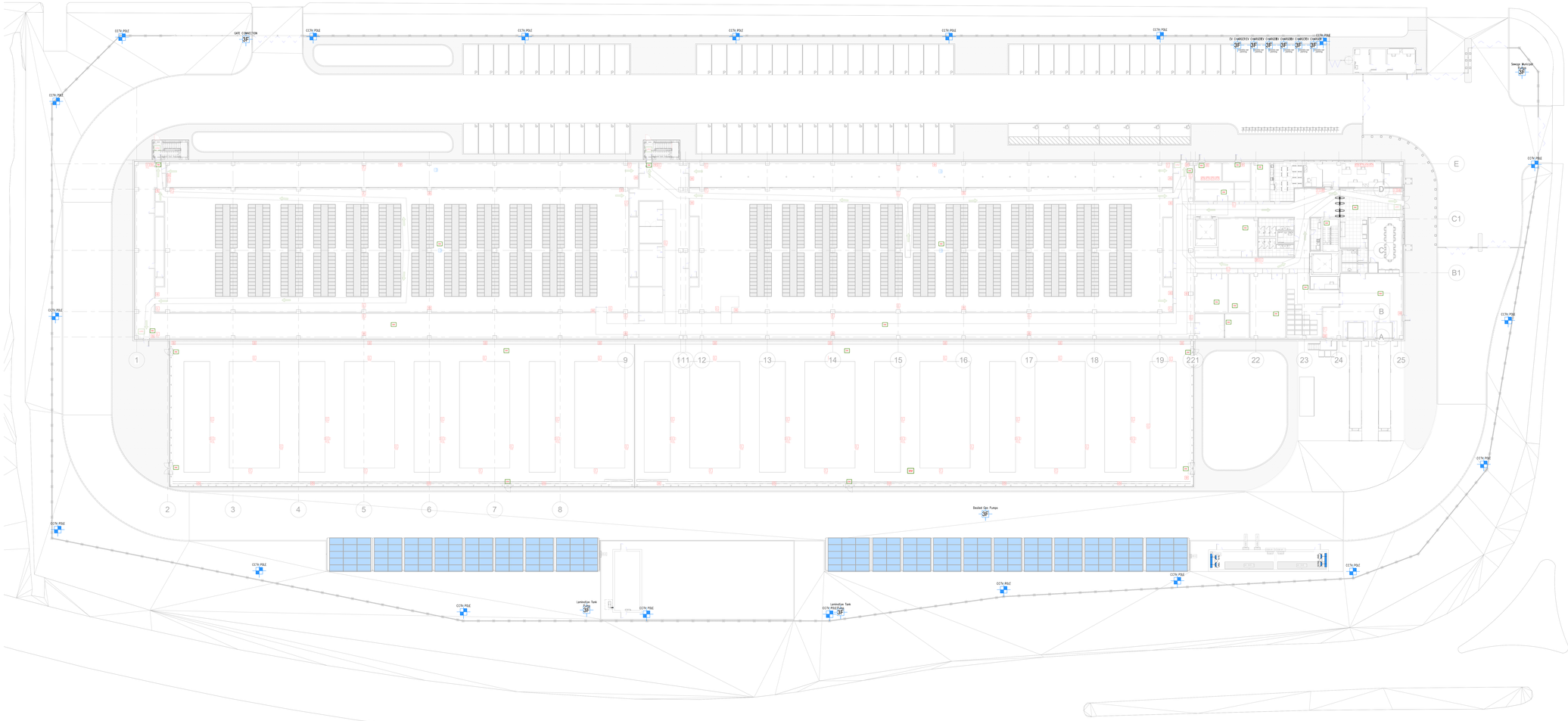

0 2 4 6 8 10m

Small Power Legend :

6x13A 1xYY	Surfaced mounted Box 503 with n°1 UNEL socket + n°1 1x10/16A-T socket YYY - indicates the type of equipment
X/P X/F	3-phase connection point

Il presente elaborato è valido solo in coordinamento con tutte le altre discipline specialistiche con le quali deve essere verificata la conformità. Tutte le misure ed eventuali variazioni rispetto al presente elaborato devono essere verificate in cantiere.
This plan only valid in connection & coordination with the plans of all other Specialist disciplines, and must be checked for conformity with these plans. Deviations in dimensions must be clarified with the site management.

CLIENT / COMMITTENTE:

STACK INFRASTRUCTURE

STACK MIL07 Datacenter

Via Lombardia, 27010 Siziano PV

BIM Manager / Coordinatore Consulente BIM del Cliente
ARC:BIM
2nd Floor, 140 St John Street - London, GB

ARC:BIM

DESIGN TEAM / TEAM DI PROGETTO

CONSULTING DESIGNER / PROGETTISTA

ARCHITECTURAL DESIGN / PROGETTO ARCHITETTONICO
Arch. Daniele De Bettin
DBA S.p.A.
Viale Liguria 24, Milano (MI)

STRUCTURAL DESIGN / PROGETTO STRUTTURE
Ing. Diego Serafini
DBA S.p.A.
Viale G. G. Felissent 20D, Vittorio (TV)

MECHANICAL DESIGN / PROGETTO IMP. MECCANICI ED ELETTRICI
Ing. Sandro Buselli
DBA S.p.A.
Via Natale Battaglia 10, Milano (MI)

ELECTRICAL DESIGN / PROGETTO IMP. ELETTRICI E SPECIALI
Ing. Sandro Buselli
DBA S.p.A.
Via Natale Battaglia 10, Milano (MI)

COORDINATION / COORDINAMENTO
PM - *Alessandro Masaro*
BIM Manager - *S. Di Biase*
BIM Coordinator - *R. Sodero*

INTEGRATED DESIGN / PROGETTAZIONE COORDINATA

DBA

DBA S.p.A.
Sede legale:
Via Natale Battaglia 10
20127 Milano (MI)
Sede secondaria:
Viale Felissent 20D
31020 Vittorio Veneto (TV)
tel. 0438 1412611 - fax 0438 1412612
certificata ISO 9001:2015 RINA: n.IQ0220120 Cl.Ext n.11 11910

PROJECT CODE	ORIGINATOR	FUNCTIONAL	SPATIAL S.	FORM	DISCIPLINE	TYPE	NUMBER
MIL07	DBA	EX	RL	DR	E	62	001

NOTES / NOTE:

DBA PROJECT CODE	PROJECT STAGE	STATUS / STATO	REVISION / REVISIONE	DATE / DATA
13038001	WS3	S4	P01	07/11/2025

REV.	IM	PBAD Submittal	27/11/2025
REV.		REVISION DESCRIPTION / DESCRIZIONE REVISIONE	REVISION DATE

Client / Committente: STACK INFRASTRUCTURE

Oggetto:

Subject:
Electrical
External Road Level
Small Power

SIZE / FORMATO: A0 +2 (841*1189)
SCALE / SCALA: As indicated
DRAWN / DISEGNATO: Ing. S. Sarkar
CHECKED / CONTROLLATO: S. Sonorile
APPROVED / APPROVATO: S. Buselli

FILE NAME / NOME FILE: MIL07-DBA-EX-RL-DR-E-62001-P01

PROPERTY OF DBA S.p.A. - NON UTILIZZABILE E/O REPLICABILE (ANCHE IN PARTE) SENZA CONSENSO SCRITTO DA PARTE DI DBA.

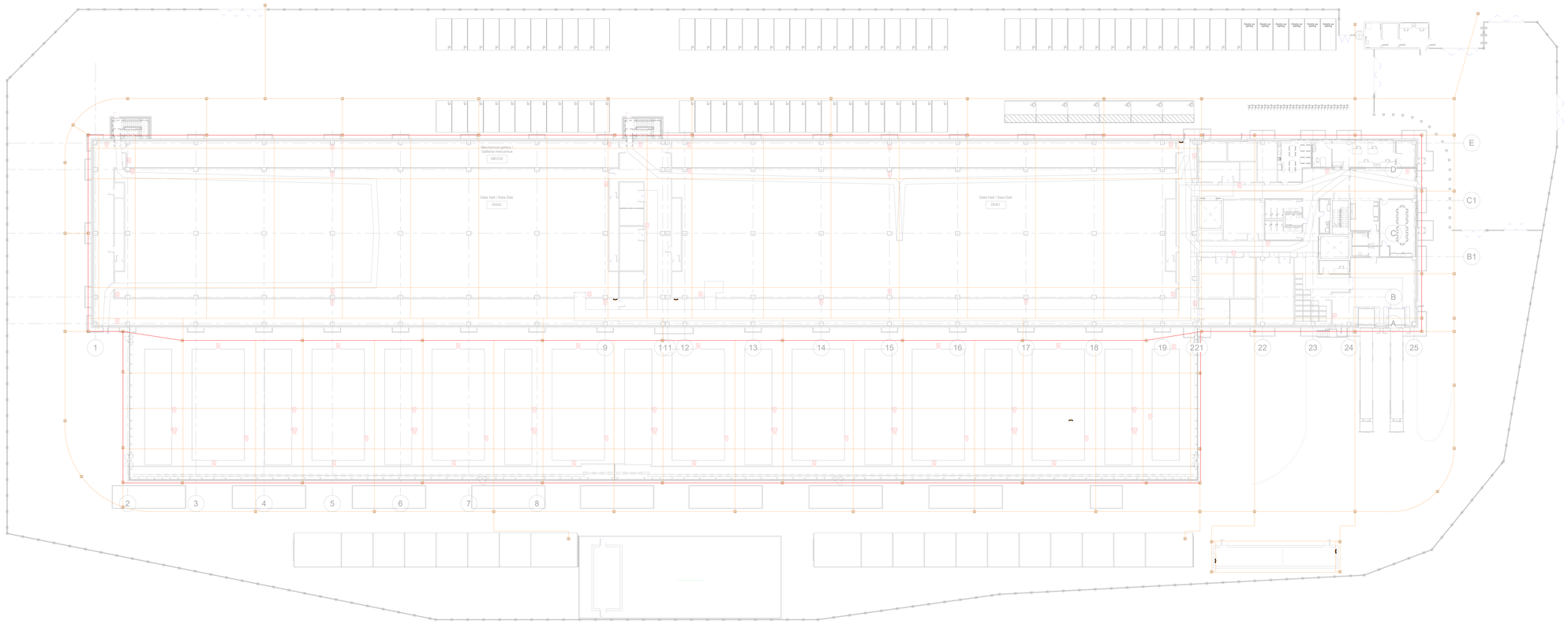

0 2 4 6 8 10m

LEGEND / LEGENDA

	Earth ring - 63 mm² / / Anello di terra - 63 mm²
	Bare copper conductor 63 mm² from ground network fixed in concrete (RD10 St/Zn) / Conduttore in rame nudo 63 mm² da rete di terra annegato nel calcestruzzo
1X1 / 3X1 / 3X1 / 1X2	Earthing Cable - HVI (Sizes as noted on SLDs) / Conduttore della calata
	Earth terminal bar Barra equipotenziale
	Earthing Chamber PI 400x400x400 mm / Pozzetto impianto di terra 400x400x400mm

Note:
The sections of the emerging logs shall be the same as the derivation of the buried mesh.

The structural reinforcements shall be connected to the grounding ring surrounding building. The connections shall be made in such a way as to ensure electrical continuity. /
I rinforzi strutturali devono essere collegati all'anello di messa a terra che circonda l'edificio. I collegamenti devono essere realizzati in modo da garantire la continuità elettrica.

For more information refer to Lightning Risk Analysis Report: MIL07-DBA-XX-XX-CA-E-69001 /
Per ulteriori informazioni fare riferimento al rapporto di analisi del rischio di fulmini: MIL07-DBA-XX-XX-CA-E-69001

Il presente elaborato è valido solo in coordinamento con tutte le altre discipline specialistiche con le quali deve essere verificata la conformità. Tutte le misure ed eventuali variazioni rispetto al presente elaborato devono essere verificate in cantiere.
This plan only valid in connection & coordination with the plans of all other Specialist disciplines, and must be checked for conformity with these plans. Deviations in dimensions must be clarified with the site management.

CLIENT / COMMITTENTE:

STACK INFRASTRUCTURE

STACK MIL07 Datacenter

Via Lombardia, 27010 Siziano PV

BIM Project Coordinator / Consulente BIM del Cliente
ARC:BIM
2nd Floor, 140 St John Street - London, GB

ARC:BIM

DESIGN TEAM / TEAM DI PROGETTO

CONSULTING DESIGNER / PROGETTISTA

ARCHITECTURAL DESIGN /
PROGETTO ARCHITETTONICO
Arch. Daniele De Bettin
DBA S.p.A.
Viale Liguria 24, Milano (MI)

STRUCTURAL DESIGN /
PROGETTO STRUTTURE
Ing. Diego Serafini
DBA S.p.A.
Viale G. G. Felissent 20D, Vittorio (TV)

MECHANICAL DESIGN /
PROGETTO IMP. MECCANICI ED ELETTRICI
Ing. Paolo Buiatti
DBA S.p.A.
Via Natale Battaglia 10, Milano (MI)

ELECTRICAL DESIGN /
PROGETTO IMP. ELETTRICI E SPECIALI
Ing. Sasha Buiatti
DBA S.p.A.
Via Natale Battaglia 10, Milano (MI)

COORDINATION / COORDINAMENTO
PM - *Alessandro Mizzaro*
BIM Manager - *S. Di Biase*
BIM Coordinator - *R. Sodano*

INTEGRATED DESIGN / PROGETTAZIONE COORDINATA

DBA

DBA S.p.A.
Sede legale:
Via Trieste, 63
Cornuda (TV) - Italy
Codice Fiscale e P.I. 04076860263
certificato ISO 9001:2015 RINA: A-550231/0-FOR Rev.0 Y-108110

Sede secondaria:
Via Natale Battaglia, 10
20127 Milano (MI) ITALY
tel. 02 87389000 fax 02 87389001

PROJECT CODE	ORIGINATOR	FUNCTIONAL BREAKDOWN	SPATIAL BREAKDOWN	FORM	DISCIPLINE	TYPE	NUMBER
MIL07	DBA	EX	UG	DR	E	69	001

NOTES / NOTE:

DBA PROJECT CODE	PROJECT STAGE	STATUS / STATO	REVISION / REVISIONE	DATE / DATA
13038001	WS3	S4	P01	07/11/2025

REV.	INI.	REASON / DESCRIPTION / DESCRIZIONE REVISIONE	DATE / DATA
P01	SB	FIRM3 Submittal	07/11/2025

Client / Committente: STACK INFRASTRUCTURE

Oggetto:

Subject:
Electrical
External Underground
Earthing and Lighting

SIZE / FORMATO: A0 +2 (841*1189)
SCALE / SCALA: As indicated
DRAWN / DISEGNATO: S. Sarkar
CHECKED / CONTROLLATO: S. Sonzini
APPROVED / APPROVATO: S. Bisetti

FILE NAME / NOME FILE: MIL07-DBA-EX-UG-DR-E-69001-P01

PROPERTY OF DBA S.p.A. - NON LITIGIOSABILE E RIPRODUCIBILE (ANCHE IN PARTE) SENZA CONSENSO SCRITTO DA PARTE DI DBA.

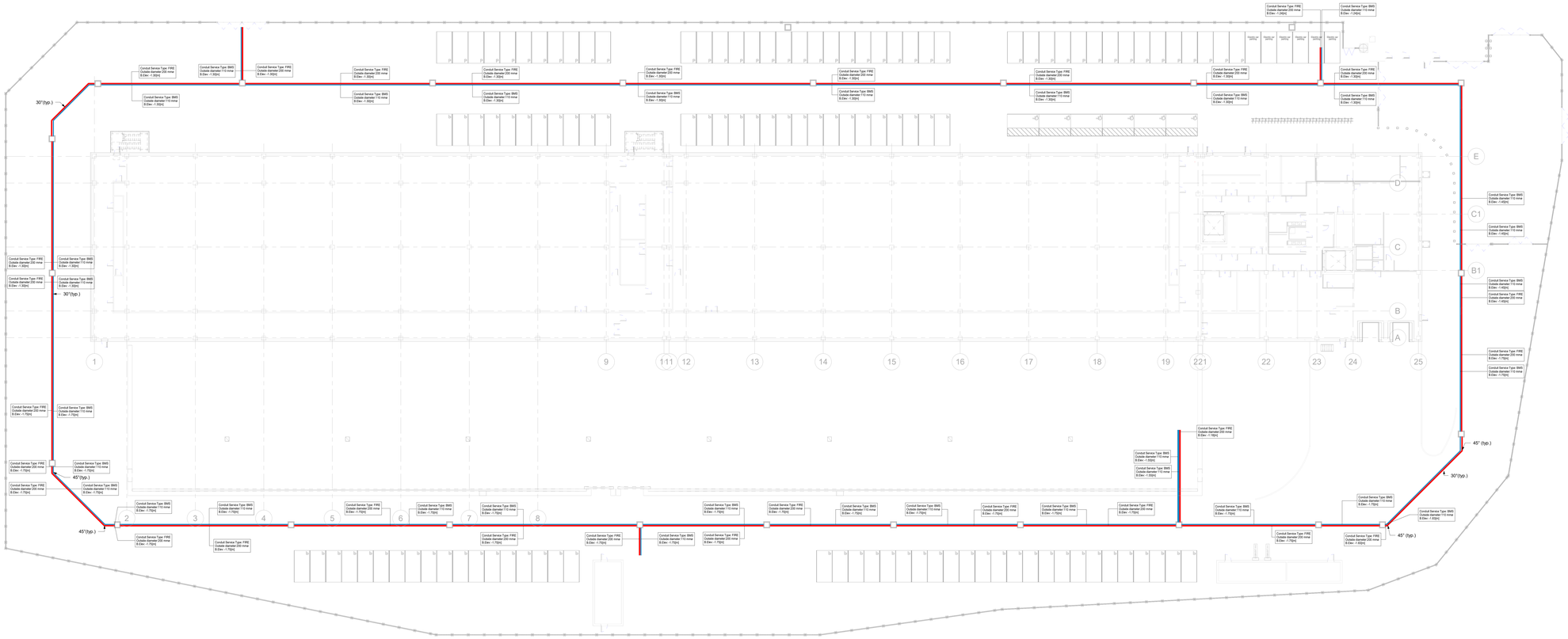

0 2 4 6 8 10m

LEGEND/LEGENDA

Extra Low Voltage Containments	
	Fire Alarm Conduit outside diameter 1x Ø 200 mm / Cavidotti allarme antincendio diametro esterno 1x Ø 110 mm
	Controls - BMS - Security conduit outside diameter 2x Ø 110 mm / Cavidotti Controlli - segnali diametro esterno 2x Ø 110 mm
	Electrical Extra PV Pit 1.00x1.00x1.50 m Pozzetto d'ispezione dimensioni 1.00 x 1.00 x 1.50 m

Il presente elaborato è valido solo in coordinamento con tutte le altre discipline specialistiche con le quali deve essere verificata la conformità. Tutte le misure ed eventuali variazioni rispetto al presente elaborato devono essere verificate in cantiere.
This plan only valid in connection & coordination with the plans of all other Specialist disciplines, and must be checked for conformity with these plans. Deviations in dimensions must be clarified with the site management.

CLIENT / COMMITTENTE:

STACK INFRASTRUCTURE

STACK MIL07 Datacenter

Via Lombardia, 27010 Siziano PV

BIM Consultant / Coordinator: Consulente BIM del Cliente
ARC:BIM
2nd Floor, 140 St John Street - London, GB

DESIGN TEAM / TEAM DI PROGETTO

CONSULTING DESIGNER / PROGETTISTA

ARCHITECTURAL DESIGN / PROGETTO ARCHITETTONICO
Arch. Daniele De Bettin
DBA S.p.A.
Viale Liguria 24, Milano (MI)

STRUCTURAL DESIGN / PROGETTO STRUTTURE
Ing. Diego Serafini
DBA S.p.A.
Viale G. G. Felissent 20D, Vittoria (TV)

MECHANICAL DESIGN / PROGETTO IMP. MECCANICI ED ELETTRICI
Ing. Sandro Busetti
DBA S.p.A.
Via Natale Battaglia 10, Milano (MI)

ELECTRICAL DESIGN / PROGETTO IMP. ELETTRICI E SPECIALI
Ing. Sandro Busetti
DBA S.p.A.
Via Natale Battaglia 10, Milano (MI)

COORDINATION / COORDINAMENTO
PM - Alessandro Masaro
BIM Manager - S. Di Biase
BIM Coordinator - R. Sodero

INTEGRATED DESIGN / PROGETTAZIONE COORDINATA

PROJECT CODE	ORIGINATOR	FUNCTIONAL	SPATIAL B.	FORM	DISCIPLINE	TYPE	NUMBER
MIL07	DBA	EX	UG	DR	E	64	001

NOTES / NOTE:

DBA PROJECT CODE	PROJECT STAGE	STATUS / STATO	REVISION / REVISIONE	DATE / DATA
13038001	WS3	S4	P01	07/11/2025

REV.	IM - PBIM Submittal	27/11/2025
REV.	REVISION DESCRIPTION / DESCRIZIONE REVISIONE	REVISION DATE

Client / Committente: STACK INFRASTRUCTURE

Oggetto:

Subject:
Electrical
External Underground
Extra LV Containments

DBA S.p.A.
Sede legale:
Via Cadore, 48
20090 S. Donato M.se (MI)
Sede secondaria:
Via Cadore, 48
20090 S. Donato M.se (MI)
Sede secondaria:
Via Cadore, 48/A
31020 Villorba (TV)
certificata ISO 9001:2015 RINA n.IQNET0170 CQNA n.0114 118010

SIZE / FORMATO	SCALE / SCALA
A0 +2 (841 x 1635)	As indicated

DRAWN BY / DISEGNATO	CHECKED BY / CONTROLLATO
S. Sonzini	S. Basak

APPROVED BY / APPROVATO	VALIDATED BY / VALIDATO
S. Busetti	S. Di Biase

FILE NAME / NOME FILE: MIL07-DBA-EX-UG-DR-E-64001-P01

PROPERTY OF DBA S.p.A. - NON LITEGIABILE O RIPRODUCIBILE (ANCHE IN PARTE) SENZA CONSENSO SCRITTO DA PARTE DI DBA.

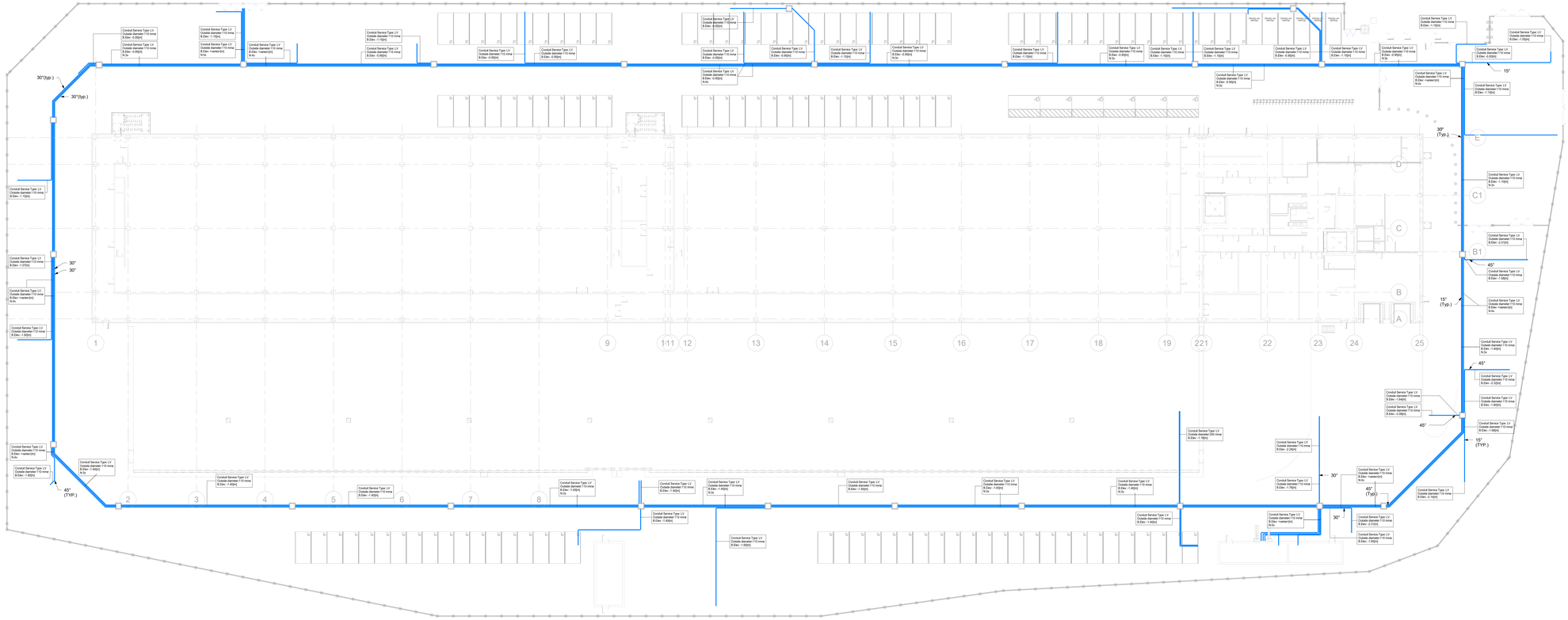

LEGEND/LEGENDA

Distribuzione Bassa Tensione
Low Voltage Containments

LV Conduit outside diameter Ø 110 mm / Cavidotti Bassa Tensione diametro esterno Ø 110 mm

Electrical LV Pit 1.00x1.00x1.50 m
Pozzetto d'ispezione Bassa Tensione dimensioni 1.00 x 1.00 x 1.50 m

Il presente elaborato è valido solo in coordinamento con tutte le altre discipline specialistiche con le quali deve essere verificata la conformità. Tutte le misure ed eventuali variazioni rispetto al presente elaborato devono essere verificate in cantiere.
This plan only valid in connection & coordination with the plans of all other Specialist disciplines, and must be checked for conformity with these plans. Deviations in dimensions must be clarified with the site management.

CLIENT / COMMITTENTE:

STACK INFRASTRUCTURE

STACK MIL07 Datacenter

Via Lombardia, 27010 Siziano PV

BIM Coordinator / Consulente BIM del Cliente
ARC:BIM
2nd Floor, 140 St John Street - London, GB

ARC:BIM

DESIGN TEAM / TEAM DI PROGETTO

CONSULTING DESIGNER / PROGETTISTA

ARCHITECTURAL DESIGN /
PROGETTO ARCHITETTONICO
Arch. Daniele De Bettin
DBA S.p.A.
Viale Liguria 24, Milano (MI)

STRUCTURAL DESIGN /
PROGETTO STRUTTURE
Ing. Diego Serafini
DBA S.p.A.
Viale G. G. Falisavel 20D, Vittoria (TV)

MECHANICAL DESIGN /
PROGETTO IMP. MECCANICI ED ELETTRICI
Ing. Sandro Busetti
DBA S.p.A.
Via Natale Battaglia 10, Milano (MI)

ELECTRICAL DESIGN /
PROGETTO IMP. ELETTRICI E SPECIALI
Ing. Sandro Busetti
DBA S.p.A.
Via Natale Battaglia 10, Milano (MI)

COORDINATION / COORDINAMENTO
PM - *Alessandro Masaro*
BIM Manager - *S. Di Biase*
BIM Coordinator - *R. Sodero*

INTEGRATED DESIGN / PROGETTAZIONE COORDINATA

DBA

DBA S.p.A.
Sede legale:
Via Natale Battaglia, 10
20127 S. Donato di Castro (BL)
Sede secondaria:
Viale Liguria, 24
20143 Milano (MI)
certificata ISO 9001:2015 - RINA: 4-0023/15-FSC-I-118810

PROJECT CODE	ORIGINATOR	FUNCTIONAL	SPATIAL S.	FORM	DISCIPLINE	TYPE	NUMBER
MIL07	DBA	EX	UG	DR	E	61	001

NOTES / NOTE:

DBA PROJECT CODE	PROJECT STAGE	STATUS / STATO	REVISION / REVISIONE	DATE / DATA
13038001	WS3	S4	P01	07/11/2025

REV.	IM - PBAG Submittal	07/11/2025
REV.	REVISION DESCRIPTION / DESCRIZIONE REVISIONE	REVISION DATE

Client / Committente: STACK INFRASTRUCTURE

Oggetto:

Subject:
Electrical
External Underground
LV Containments

SIZE / FORMATO: A0 +2 (841 x 1189)
Scale / Scala: As indicated
DRAWN / DISEGNATO: S. Banaik
CHECKED / CONTROLLATO: S. Sonorin
APPROVED / APPROVATO: S. Busetti

FILE NAME / NOME FILE: MIL07-DBA-EX-UG-DR-E-6001-P01

PROPERTY OF DBA S.p.A. - NON LITIGIOSABILE O REPLICABILE (ANCHE IN PARTE) SENZA CONSENSO SCRITTO DA PARTE DI DBA.

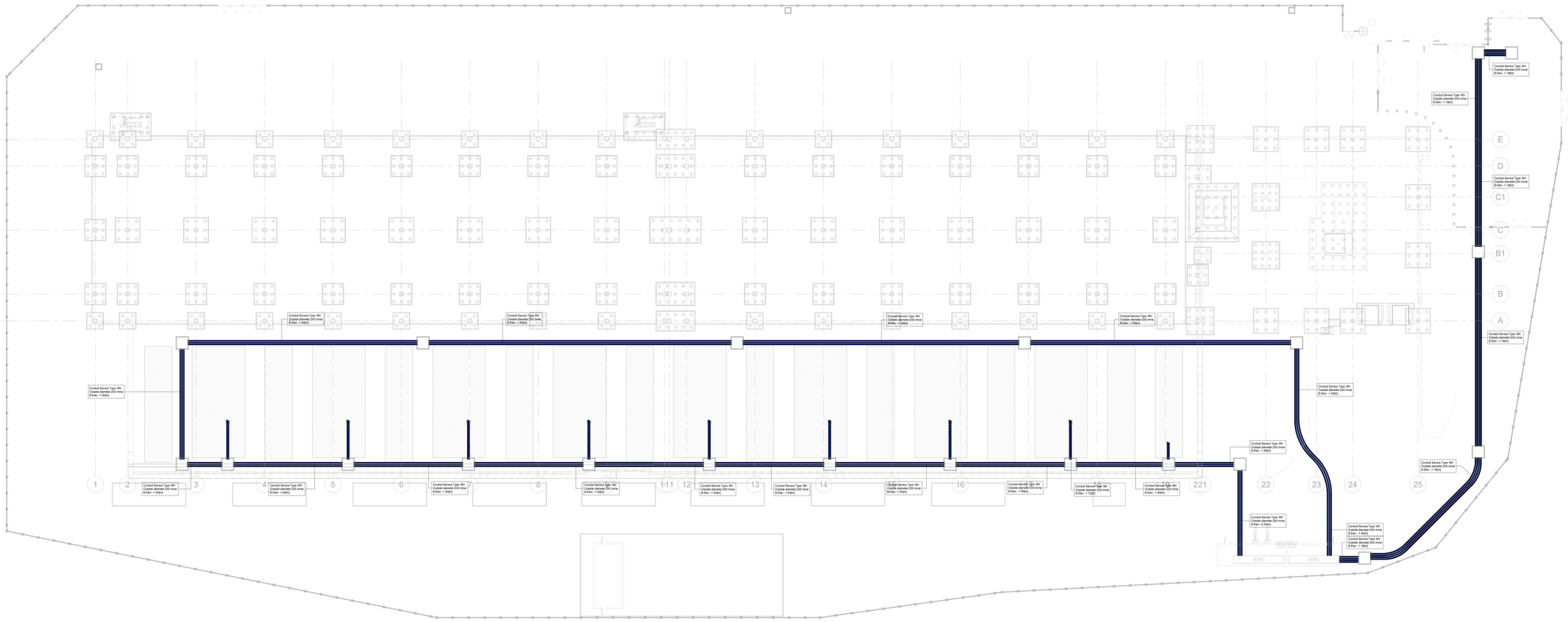

0 2 4 6 8 10m

LEGEND/LEGENDA

Distribuzione Media Tensione Tensione
Medium Voltage Containments

MV Conduit outside diameter Ø 200 mm / Cavidotti Media Tensione diametro esterno Ø 200 mm

Electrical MV Pit 2.00x2.00x2.50 m
Pozzetto d'ispezione MT dimensioni 2.00x2.00x2.50 m

Il presente elaborato è valido solo in coordinamento con tutte le altre discipline specialistiche con le quali deve essere verificata la conformità. Tutte le misure ed eventuali variazioni rispetto al presente elaborato devono essere verificate in cantiere.
This plan only valid in connection & coordination with the plans of all other Specialist disciplines, and must be checked for conformity with these plans. Deviations in dimensions must be clarified with the site management.

CLIENT / COMMITTENTE:

STACK INFRASTRUCTURE

STACK MIL07 Datacenter

Via Lombardia, 27010 Siziano PV

BIM Coordination & Consulenza BIM del Cliente
ARC:BIM
2nd Floor, 140 St John Street - London, GB

ARC:BIM

DESIGN TEAM / TEAM DI PROGETTO

CONSULTING DESIGNER / PROGETTISTA

ARCHITECTURAL DESIGN /
PROGETTO ARCHITETTONICO
Arch. Daniele De Betto
DBA S.p.A.
Viale Liguria 24, Milano (MI)

STRUCTURAL DESIGN /
PROGETTO STRUTTURE
Ing. Diego Serafini
DBA S.p.A.
Viale G. G. Felissent 20D, Vittorio (TV)

MECHANICAL DESIGN /
PROGETTO IMP. MECCANICI ED ELETTRICI
Ing. Sandro Buselli
DBA S.p.A.
Via Natale Battaglia 10, Milano (MI)

ELECTRICAL DESIGN /
PROGETTO IMP. ELETTRICI E SPECIALI
Ing. Sandro Buselli
DBA S.p.A.
Via Natale Battaglia 10, Milano (MI)

COORDINATION / COORDINAMENTO
PM - Alessandro Masaro
BIM Manager - S. Di Biase
BIM Coordinator - R. Sodero

INTEGRATED DESIGN / PROGETTAZIONE COORDINATA

PROJECT CODE	ORIGINATOR	FUNCTIONAL	SPATIAL S.	FORM	DISCIPLINE	TYPE	NUMBER
MIL07	DBA	EX	UG	DR	E	59	001

NOTES / NOTE:

DBA PROJECT CODE	PROJECT STAGE	STATUS / STATO	REVISION / REVISIONE	DATE / DATA
13038001	WS3	S4	P01	07/11/2025

REV.	IM	TRIBO Submittal	27/11/2025
REV.		REVISION DESCRIPTION / DESCRIZIONE REVISIONE	REVISION DATE

DBA

DBA S.p.A.
Sede legale:
Via Cà Rossa, 10
22063 S. Margherita di Cadoro (BL)
Sede secondaria:
Viale Liguria 24
20144 Milano (MI)
Sede secondaria:
Via G. G. Felissent 20D
31029 Vittorio Veneto (TV)
certificato ISO 9001:2015 RINA: 4-0023/0100 CSQ
certificato ISO 9001:2015 CSQ: 4-0111/0110

Client / Committente: STACK INFRASTRUCTURE

Oggetto:

Subject:
Electrical
External Underground
MV Containments

SIZE / FORMAT: A0 +2 (841*1189)
Scale / Scala: As indicated
DRAWN / DISEGNATO: S. Basuk
CHECKED / CONTROLLATO: S. Sonzini
APPROVED / APPROVATO: S. Buselli

FILE NAME / NOME FILE: MIL07-DBA-EX-UG-DR-E-59001-P01

PROPERTY OF DBA S.p.A. - NON UTILIZZABILE O REPLICABILE (ANCHE IN PARTE) SENZA CONSENSO SCRITTO DA PARTE DI DBA.